YAMAHA

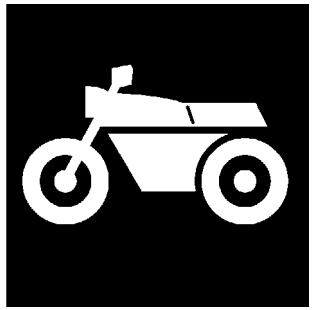

PARTS CATALOGUE

YZF-R1S (5VY4) U49
YZF-R1SC (5VY5) CALIFORNIA
YZF-R1S (5VY6) CANADA

1C5VY-100E1

(2C5VY-100E1)

YAMAHA GENUINE Parts & Accessories

NEWS No.	DATE	COMMENT
PE0-MC-070044	May., 9, 2007	FIG.6: WATER PUMP LIST&ILLUSTRATION CORRECTION

2007/5/16

A2

YZF-R1S/YZF-R1SC
PARTS CATALOGUE
©2004 by Yamaha Motor Co., Ltd.
1st edition, January 2004
All rights reserved.
Any reprinting or unauthorized use
without the written permission of
Yamaha Motor Co., Ltd.
is expressly prohibited.
Printed in Japan.

A3

YZF-R1S/YZF-R1SC

A4

FOREWORD

This Parts Catalogue is related to the parts for the model(s) on the cover page. When you are ordering replacement parts, please refer to this Parts Catalogue and quote both part numbers and part names correctly.

1. Modifications or additions which have been made after the issue of the Parts Catalogue will be announced in the Parts News.
   It is advisable that you make the necessary corrections to the Parts Catalogue according to the Parts News.

2. Abbreviations
   The following abbreviations are used in this Parts Catalogue.

   "UR" Use specified parts number.
   "UN" Use as many as needed.
   "AP" Alternate Parts
   "LM" Locally Made (Parts need to be ordered locally)
   "F#" Frame No. (Applicable machine No.)
   "O/S" Over Size

3. The number of components for assembly
   - Parts, which are to be supplied in an assembly, are listed with a dot (.) in front of the part name as shown below.
   - The numeral appearing to the right of each component part indicates the quantity of parts for each assembly unit.

PART NO.	DESCRIPTION	Q'TY	REMARKS
2F5–83310–60	FRONT FLASHER LIGHT ASSY	2	
115–83311–60	.BULB (6V–18W)	1	

4. Applicable colours of graphics are represented in the "REMARKS" as shown below.

PART NO.	DESCRIPTION	Q'TY	REMARKS
2N4–24110–00–X5	FUEL TANK COMP.	2	MXR
3J1–24240–10	.GRAPHIC, FUEL TANK	1	FOR MXR

5. Note that the illustrations for reference in finding parts numbers are not to be used for assembling. When assembling, please use the applicable service manual.

6. The asterisk (*) before a reference number indicates modified items after the first edition.

7. Applicable Serial No.

Engine Serial No.

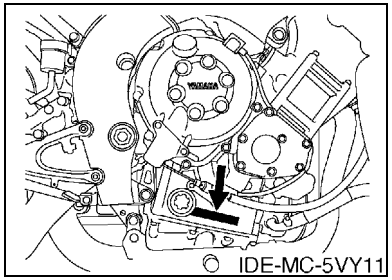

Frame Serial No.

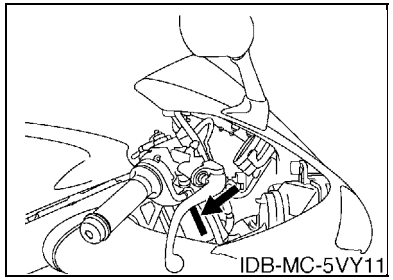

8. Applicable Colour Code (The (*) mark shows Model colour.)

Abbreviation	Colour Name	Colour Code
BS4(*)	BLUISH SILVER 4	0820
DPBMC(*)	DEEP PURPLISH BLUE METALLIC C	0564
DRMK(*)	DEEP RED METALLIC K	0918
LGB	LOW GLOSS BLACK	0098
MBL2	MAT BLACK 2	0582
MT2	MAT TITAN 2	0826
S3	SILVER 3	0791

MODEL LABEL

(1) A label called “Model Label” is affixed in the location as indicated in (3) below.
When using this parts catalogue, please be sure to cross–reference the “model code – production code No.” in the catalogue with the “model code – production code No.” indicated on the Model Label affixed onto the product concerned.

(2) “Model Label” Indication

a b ○ xxxx – xxx ● x c	a: Model Type Code b: Production Code No. c: Colouring Type

○ 4TW1–010 ● A

(3) Model Label Affixing Location

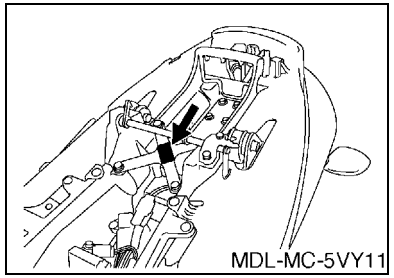

(4) Colouring Information

Model Code	Colouring Type Code	Colour Code	Colour Name	Abbreviation
5VY4	A	0918	DEEP RED METALLIC K	DRMK
	B	0564	DEEP PURPLISH BLUE METALLIC C	DPBMC
	C	0820	BLUISH SILVER 4	BS4
5VY5	A	0918	DEEP RED METALLIC K	DRMK
	B	0564	DEEP PURPLISH BLUE METALLIC C	DPBMC
	C	0820	BLUISH SILVER 4	BS4
5VY6	A	0918	DEEP RED METALLIC K	DRMK
	B	0564	DEEP PURPLISH BLUE METALLIC C	DPBMC
	C	0820	BLUISH SILVER 4	BS4

(5) Model Code – Production Code Number of Model Listed in This Parts Catalogue

Model Code	Production Code No.	Country (destination)	Model Code	Production Code No.	Country (destination)
5VY4	010	U49			
5VY5	010	CALIFORNIA			
5VY6	010	CANADA			

CONTENTS

ENGINE

CYLINDER HEAD B2
CYLINDER B4
CRANKSHAFT & PISTON B5
VALVE B6
CAMSHAFT & CHAIN B8
WATER PUMP B9
RADIATOR & HOSE B11
OIL PUMP B13
OIL CLEANER B14
INTAKE B15
INTAKE 2 ..... C3
AIR INDUCTION SYSTEM C5
EXHAUST C6
CRANKCASE C9
CRANKCASE COVER 1 ..... C10
STARTER C12
CLUTCH C13
TRANSMISSION C15
SHIFT CAM & FORK D3
SHIFT SHAFT D4

CHASSIS

FRAME D5
FENDER D7
SIDE COVER D10
REAR ARM D12
REAR SUSPENSION D14
STEERING D15
FRONT FORK E2
FUEL TANK E4
SEAT E8
FRONT WHEEL E9
FRONT BRAKE CALIPER E10
REAR WHEEL E11
REAR BRAKE CALIPER E13
STEERING HANDLE & CABLE E14
FRONT MASTER CYLINDER E15
STAND & FOOTREST F3
REAR MASTER CYLINDER F5
COWLING 1 ..... F6
COWLING 2 ..... F8
GENERATOR F11
STARTING MOTOR F12
FLASHER LIGHT F13
METER F14
HEADLIGHT F15
TAILLIGHT G2
HANDLE SWITCH & LEVER G3
ELECTRICAL 1 ..... G4
ELECTRICAL 2 ..... G6

INDEX

NUMERICAL INDEX M1

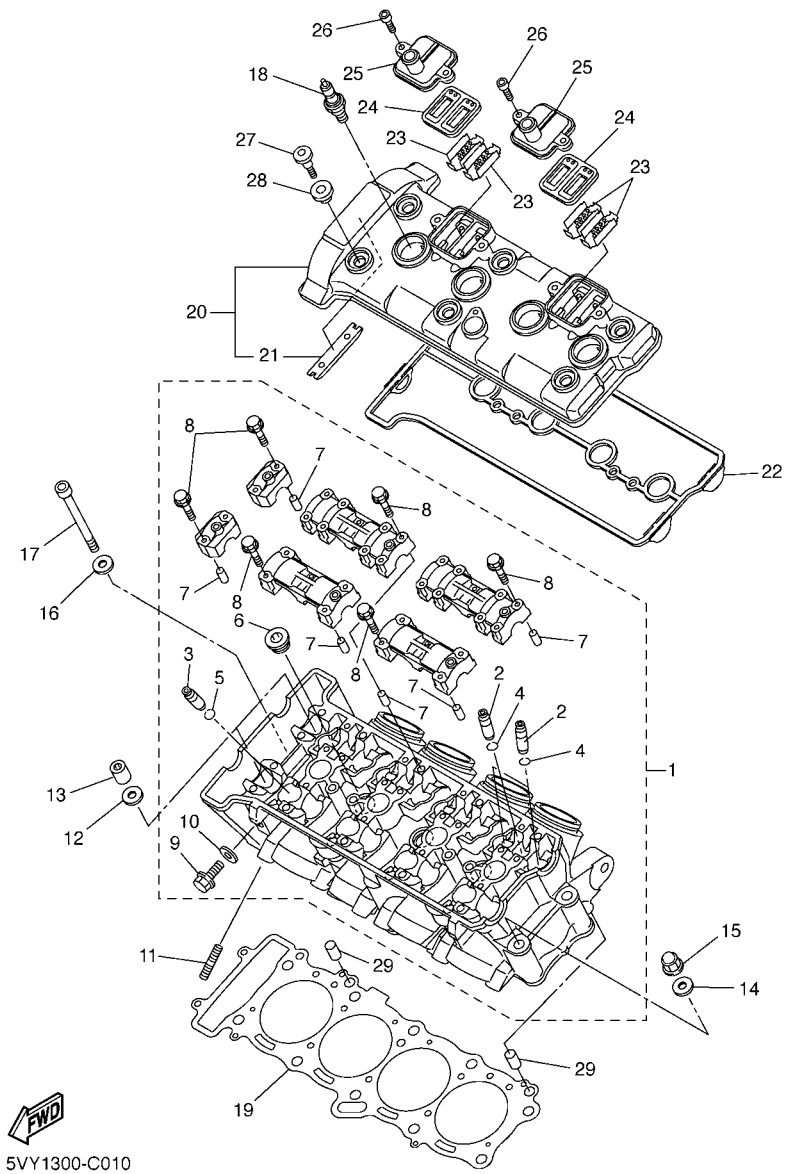

FIG. 1 CYLINDER HEAD

REF. NO.	PART NO.	DESCRIPTION	5VY4	5VY5	5VY6			REMARKS
1	5VY–11101–00	CYLINDER HEAD ASSY	1	1	1			
2	5VY–11133–10	.GUIDE, VALVE 1	12	12	12			
3	5VY–11134–10	.GUIDE, VALVE 2	8	8	8			
4	93440–07149	.CIRCLIP	12	12	12			
5	93440–10153	.CIRCLIP	8	8	8			
6	90340–18150	.PLUG, STRAIGHT SCREW	3	3	3			
7	91808–16023	.PIN, DOWEL	6	6	6			
8	90105–06026	.BOLT, FLANGE	28	28	28			
9	95024–06012	.BOLT, FLANGE	1	1	1			
10	90430–06014	.GASKET	1	1	1			
11	95617–08625	BOLT, STUD	8	8	8			
12	90201–10013	WASHER, PLATE	8	8	8			
13	90179–10006	NUT	8	8	8			
14	90201–10013	WASHER, PLATE	2	2	2			
15	90176–10075	NUT, CROWN	2	2	2			
16	90201–06016	WASHER, PLATE	2	2	2			
17	91314–06105	BOLT	2	2	2			
18	94701–00403	PLUG, SPARK (NGK CR9EK)	4	4	4			
19	5VY–11181–00	GASKET, CYLINDER HEAD 1	1	1	1			
20	5VY–11191–00	COVER, CYLINDER HEAD 1	1	1	1			
21	5BE–12241–00	.GUIDE, STOPPER 2	1	1	1			
22	5VY–11193–00	GASKET, HEAD COVER 1	1	1	1			
23	5VY–1482K–00	PLATE	4	4	4			
24	5SL–14890–00	REED VALVE ASSY	2	2	2			
25	5VY–14899–00	CAP, CASE	2	2	2			
26	90110–06118	BOLT, HEXAGON SOCKET HEAD	4	4	4			
27	90109–066F0	BOLT	6	6	6			

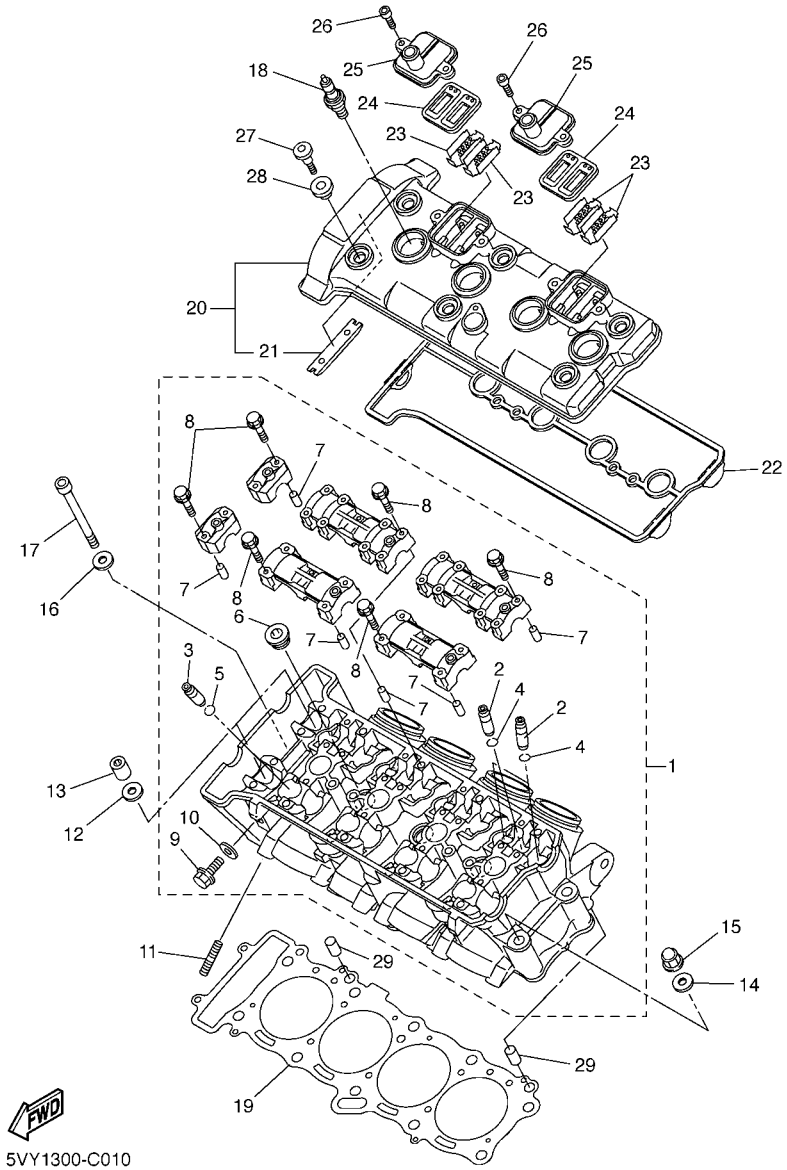

FIG. 1 CYLINDER HEAD

REF. NO.	PART NO.	DESCRIPTION	5VY4	5VY5	5VY6			REMARKS
28	4KG–1111G–00	RUBBER, MOUNT 1	6	6	6			
29	99530–10114	PIN, DOWEL	2	2	2			

FIG. 2 CYLINDER

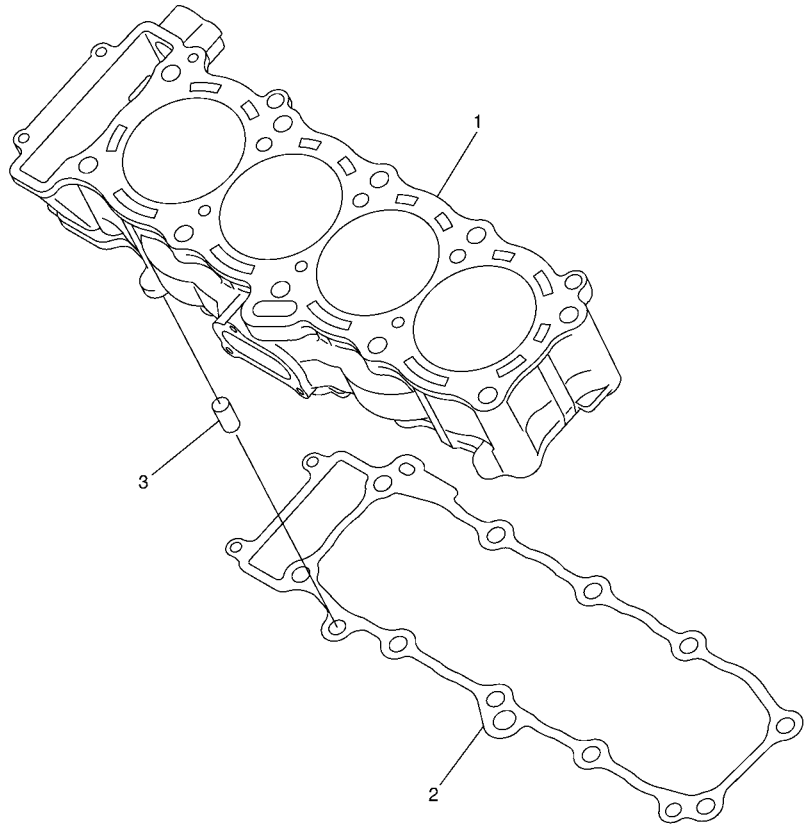

5VY1300-C020

REF. NO.	PART NO.	DESCRIPTION	5VY4	5VY5	5VY6			REMARKS
1	5VY–11311–00	CYLINDER 1	1	1	1			
2	5VY–11351–00	GASKET, CYLINDER	1	1	1			
3	99530–10114	PIN, DOWEL	2	2	2			

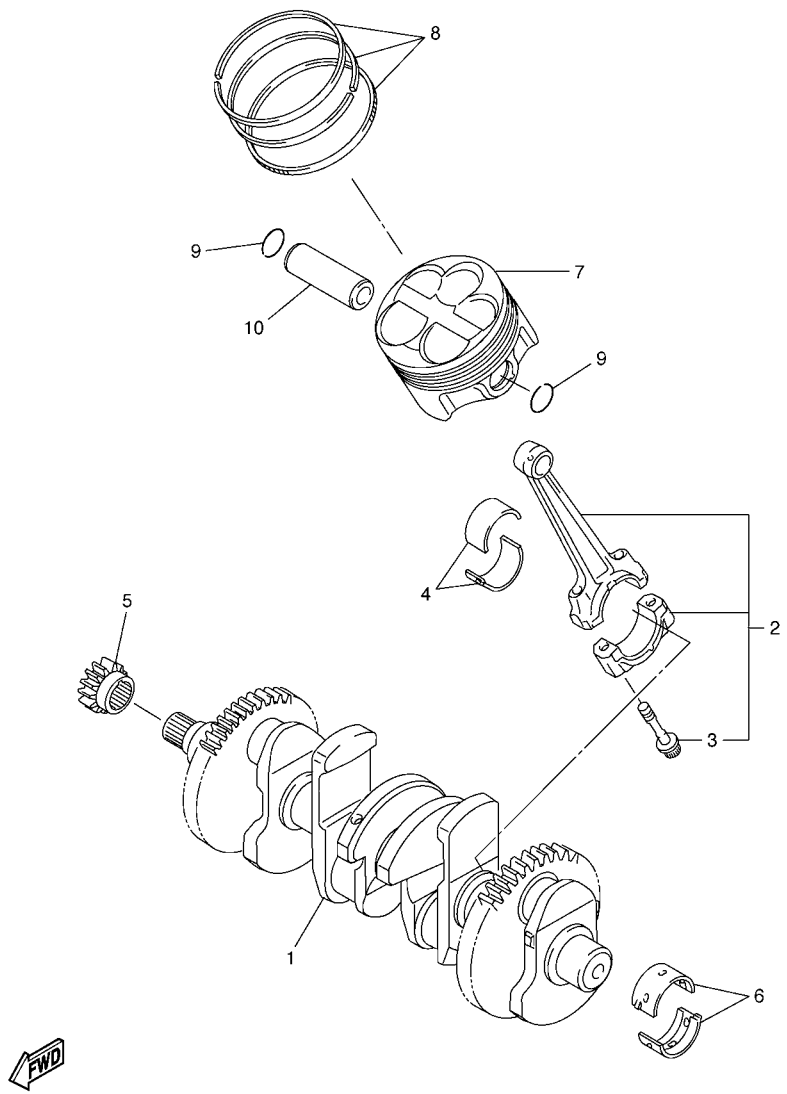

5VY1300-C030

FIG. 3 CRANKSHAFT & PISTON

REF. NO.	PART NO.	DESCRIPTION	5VY4	5VY5	5VY6			REMARKS
1	5VY–11411–01	CRANKSHAFT	1	1	1			
2	5VY–11650–01	CONNECTING ROD ASSY	4	4	4			
3	5VY–11654–01	.BOLT, CONNECTING ROD	2	2	2			
4	5VY–11656–00	PLANE BEARING, CONNECTING ROD	8	8	8			UR BLUE
	5VY–11656–10	PLANE BEARING, CONNECTING ROD	8	8	8			UR BLACK
	5VY–11656–20	PLANE BEARING, CONNECTING ROD	8	8	8			UR BROWN
	5VY–11656–30	PLANE BEARING, CONNECTING ROD	8	8	8			UR GREEN
5	5VY–11549–00	SPROCKET, CAM CHAIN	1	1	1			
6	5VY–11416–A0	PLANE BEARING, CRANKSHAFT 1	10	10	10			UR WHITE
	5VY–11416–00	PLANE BEARING, CRANKSHAFT 1	10	10	10			UR BLUE
	5VY–11416–10	PLANE BEARING, CRANKSHAFT 1	10	10	10			UR BLACK
	5VY–11416–20	PLANE BEARING, CRANKSHAFT 1	10	10	10			UR BROWN
	5VY–11416–30	PLANE BEARING, CRANKSHAFT 1	10	10	10			UR GREEN
7	5VY–11631–01	PISTON (STD)	4	4	4			
8	5VY–11603–00	PISTON RING SET (STD)	4	4	4			
9	90468–12069	CLIP	8	8	8			
10	5VY–11633–00	PIN, PISTON	4	4	4			

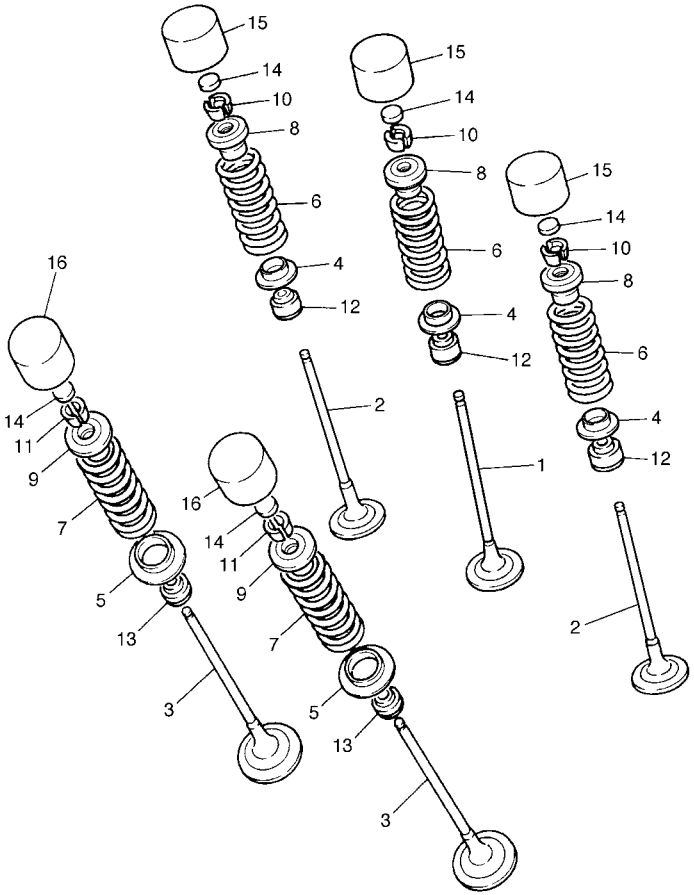

5VY1300-C040

FIG. 4 VALVE

REF. NO.	PART NO.	DESCRIPTION	5VY4	5VY5	5VY6			REMARKS
1	5VY–12111–00	VALVE, INTAKE	4	4	4			
2	5VY–12112–00	VALVE, INTAKE 2	8	8	8			
3	5VY–12121–00	VALVE, EXHAUST	8	8	8			
4	5NL–12116–00	SEAT, VALVE SPRING	12	12	12			
5	3GM–12126–00	SEAT, VALVE SPRING 2	8	8	8			
6	5VY–12113–00	SPRING, VALVE INNER	12	12	12			
7	5VY–12114–00	SPRING, VALVE OUTER	8	8	8			
8	5VY–12117–00	RETAINER, VALVE SPRING	12	12	12			
9	5VY–12127–00	RETAINER, VALVE SPRING	8	8	8			
10	1HX–12118–00	COTTER, VALVE	24	24	24			
11	1WG–12118–00	COTTER, VALVE	16	16	16			
12	4TV–12119–00	SEAL, VALVE STEM	12	12	12			
13	4SV–12119–00	SEAL, VALVE STEM	8	8	8			
14	1HX–12168–00	PAD, ADJUSTING 2 (1.20)	20	20	20			UR
	1HX–12168–20	PAD, ADJUSTING 2 (1.25)	20	20	20			UR
	1HX–12168–40	PAD, ADJUSTING 2 (1.30)	20	20	20			UR
	1HX–12168–60	PAD, ADJUSTING 2 (1.35)	20	20	20			UR
	1HX–12168–80	PAD, ADJUSTING 2 (1.40)	20	20	20			UR
	1HX–12168–A0	PAD, ADJUSTING 2 (1.45)	20	20	20			UR
	1HX–12168–F0	PAD, ADJUSTING 2 (1.50)	20	20	20			UR
	1HX–12168–H1	PAD, ADJUSTING 2 (1.55)	20	20	20			UR
	1HX–12168–K1	PAD, ADJUSTING 2 (1.60)	20	20	20			UR
	1HX–12168–M1	PAD, ADJUSTING 2 (1.65)	20	20	20			UR
	1HX–12168–R1	PAD, ADJUSTING 2 (1.70)	20	20	20			UR
	1HX–12168–U1	PAD, ADJUSTING 2 (1.75)	20	20	20			UR
	1HX–12168–W1	PAD, ADJUSTING 2 (1.80)	20	20	20			UR
	1HX–12168–Y1	PAD, ADJUSTING 2 (1.85)	20	20	20			UR

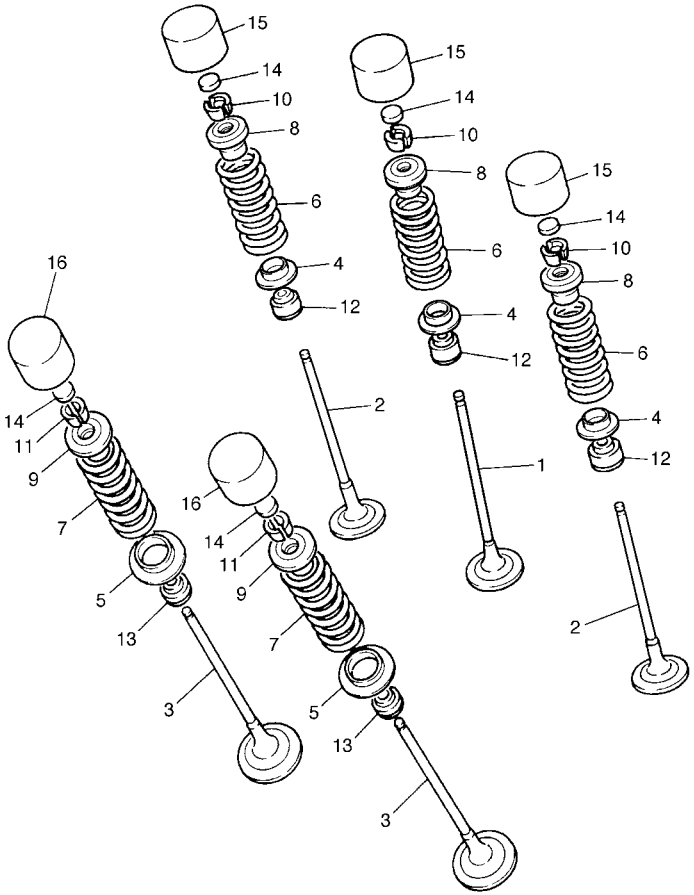

5VY1300-C040

FIG. 4 VALVE

REF. NO.	PART NO.	DESCRIPTION	5VY4	5VY5	5VY6			REMARKS
14	1HX–12169–11	PAD, ADJUSTING 2 (1.90)	20	20	20			UR
	1HX–12169–31	PAD, ADJUSTING 2 (1.95)	20	20	20			UR
	1HX–12169–50	PAD, ADJUSTING 2 (2.00)	20	20	20			UR
	1HX–12169–70	PAD, ADJUSTING 2 (2.05)	20	20	20			UR
	1HX–12169–90	PAD, ADJUSTING 2 (2.10)	20	20	20			UR
	1HX–12169–E0	PAD, ADJUSTING 2 (2.15)	20	20	20			UR
	1HX–12169–G0	PAD, ADJUSTING 2 (2.20)	20	20	20			UR
	1HX–12169–J0	PAD, ADJUSTING 2 (2.25)	20	20	20			UR
	1HX–12169–L0	PAD, ADJUSTING 2 (2.30)	20	20	20			UR
	1HX–12169–N0	PAD, ADJUSTING 2 (2.35)	20	20	20			UR
	1HX–12169–T0	PAD, ADJUSTING 2 (2.40)	20	20	20			UR
15	3LN–12153–20	LIFTER, VALVE	12	12	12			UR BLUE
	3LN–12153–30	LIFTER, VALVE	12	12	12			UR RED
	3LN–12153–09	LIFTER, VALVE (O/S)	12	12	12			UR GREEN
16	3FV–12153–20	LIFTER, VALVE	8	8	8			UR BLUE
	3FV–12153–30	LIFTER, VALVE	8	8	8			UR RED
	3FV–12153–09	LIFTER, VALVE (O/S)	8	8	8			UR GREEN

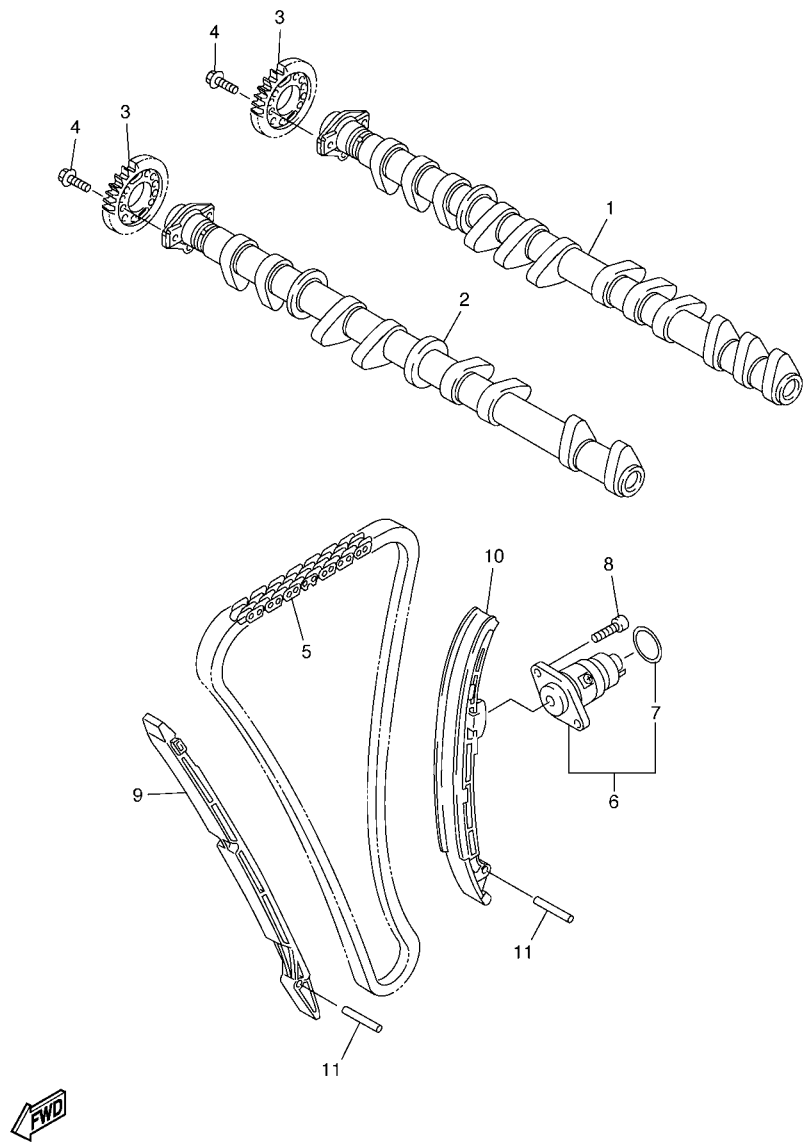

5VY1300-C050

FIG. 5 CAMSHAFT & CHAIN

REF. NO.	PART NO.	DESCRIPTION	5VY4	5VY5	5VY6			REMARKS
1	5VY–12170–00	CAMSHAFT ASSY 1	1	1	1			
2	5VY–12180–00	CAMSHAFT ASSY 2	1	1	1			
3	5VY–12176–00	SPROCKET, CAM CHAIN	2	2	2			
4	90105–07003	BOLT, FLANGE	4	4	4			
5	94591–60122	CHAIN	1	1	1			
6	5VY–12210–00	TENSIONER ASSY, CAM CHAIN	1	1	1			
7	93210–26741	.O-RING	1	1	1			
8	91314–06020	BOLT	2	2	2			
9	5VY–12251–00	DAMPER, CHAIN 1	1	1	1			
10	5VY–12252–00	DAMPER, CHAIN 2	1	1	1			
11	93607–44190	PIN, DOWEL	2	2	2			

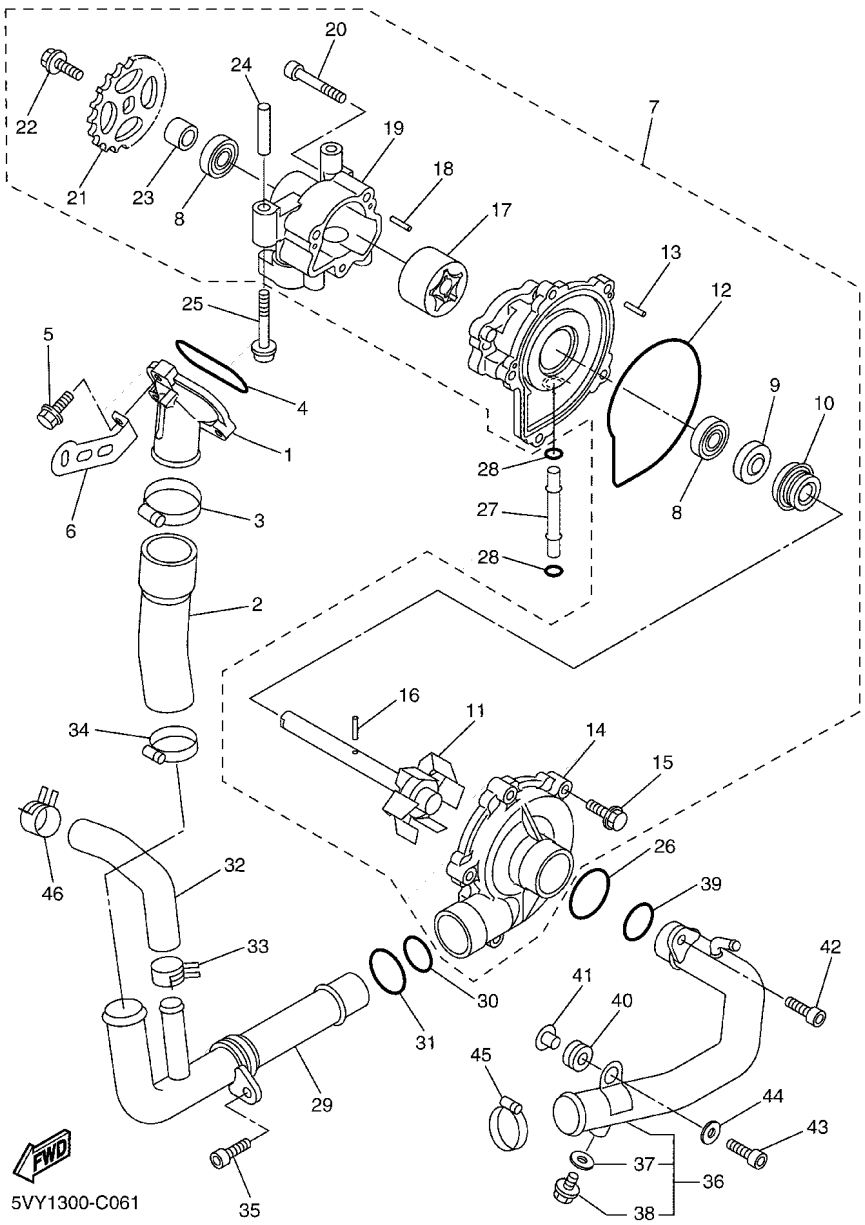

FIG. 6 WATER PUMP

REF. NO.	PART NO.	DESCRIPTION	5VY4	5VY5	5VY6			REMARKS
1	5VY–12469–00	JOINT 1	1	1	1			
2	5VY–12576–00	HOSE 1	1	1	1			
3	90450–38040	HOSE CLAMP ASSY	1	1	1			
4	93210–47675	O-RING	1	1	1			
5	95024–06025	BOLT, FLANGE	3	3	3			
6	5VY–12637–00	STAY 1	1	1	1			
7	4C8–12420–00	HOUSING, WATER PUMP	1	1	1			
8	93306–00106	.BEARING	2	2	2			
9	93102–12372	.OIL SEAL	1	1	1			
10	11H–12438–10	.SEAL, MECHANICAL	1	1	1			
11	5VY–12450–00	.IMPELLER SHAFT ASSY	1	1	1			
12	4XV–12439–00	.O-RING	1	1	1			
13	93603–12007	.PIN, DOWEL	2	2	2			
14	5VY–12422–00	.COVER, HOUSING	1	1	1			
15	90105–06065	.BOLT, FLANGE	5	5	5			
16	93603–17070	.PIN, DOWEL	1	1	1			
17	5VY–13310–10	.ROTOR ASSY 1	1	1	1			
18	93603–12007	.PIN, DOWEL	2	2	2			
19	5VY–13336–00	.HOUSING, ROTOR	1	1	1			
20	91312–06040	.BOLT	3	3	3			
21	5VY–13355–00	.SPROCKET, DRIVEN	1	1	1			
22	90105–06066	.BOLT, FLANGE	1	1	1			
23	5VY–12456–10	.WASHER	1	1	1			
24	91808–30031	PIN, DOWEL	1	1	1			
25	90110–06026	BOLT, HEXAGON SOCKET HEAD	2	2	2			
26	93210–357A2	O-RING	1	1	1			
27	4XV–12485–00	PIPE 5	1	1	1			

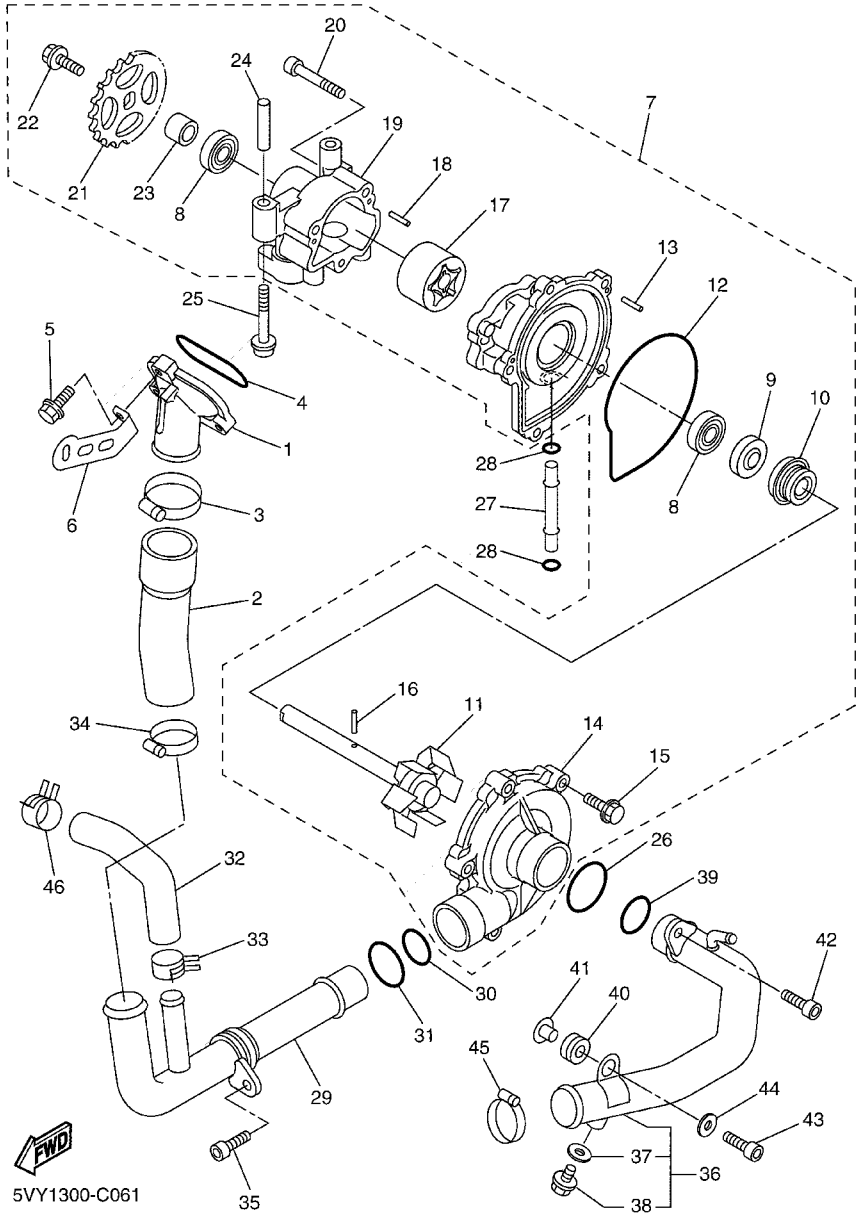

FIG. 6 WATER PUMP

REF. NO.	PART NO.	DESCRIPTION	5VY4	5VY5	5VY6			REMARKS
28	93210–06667	O-RING	2	2	2			
29	5VY–12481–00	PIPE 1	1	1	1			
30	93210–235A1	O-RING	1	1	1			
31	93210–27370	O-RING	1	1	1			
32	5VY–12588–00	HOSE 5	1	1	1			
33	90467–200A0	CLIP	1	1	1			
34	90450–32001	HOSE CLAMP ASSY	1	1	1			
35	90110–06041	BOLT, HEXAGON SOCKET HEAD	1	1	1			
36	5VY–12484–00	PIPE 4	1	1	1			
37	90430–06014	.GASKET	1	1	1			
38	90153–06029	.SCREW, HEXAGON	1	1	1			
39	93210–235A1	O-RING	1	1	1			
40	90480–12010	GROMMET	1	1	1			
41	90387–06087	COLLAR	1	1	1			
42	90110–06041	BOLT, HEXAGON SOCKET HEAD	1	1	1			
43	90110–06019	BOLT, HEXAGON SOCKET HEAD	1	1	1			
44	90201–06055	WASHER, PLATE	1	1	1			
45	90450–32001	HOSE CLAMP ASSY	1	1	1			
46	90467–200A0	CLIP	1	1	1			

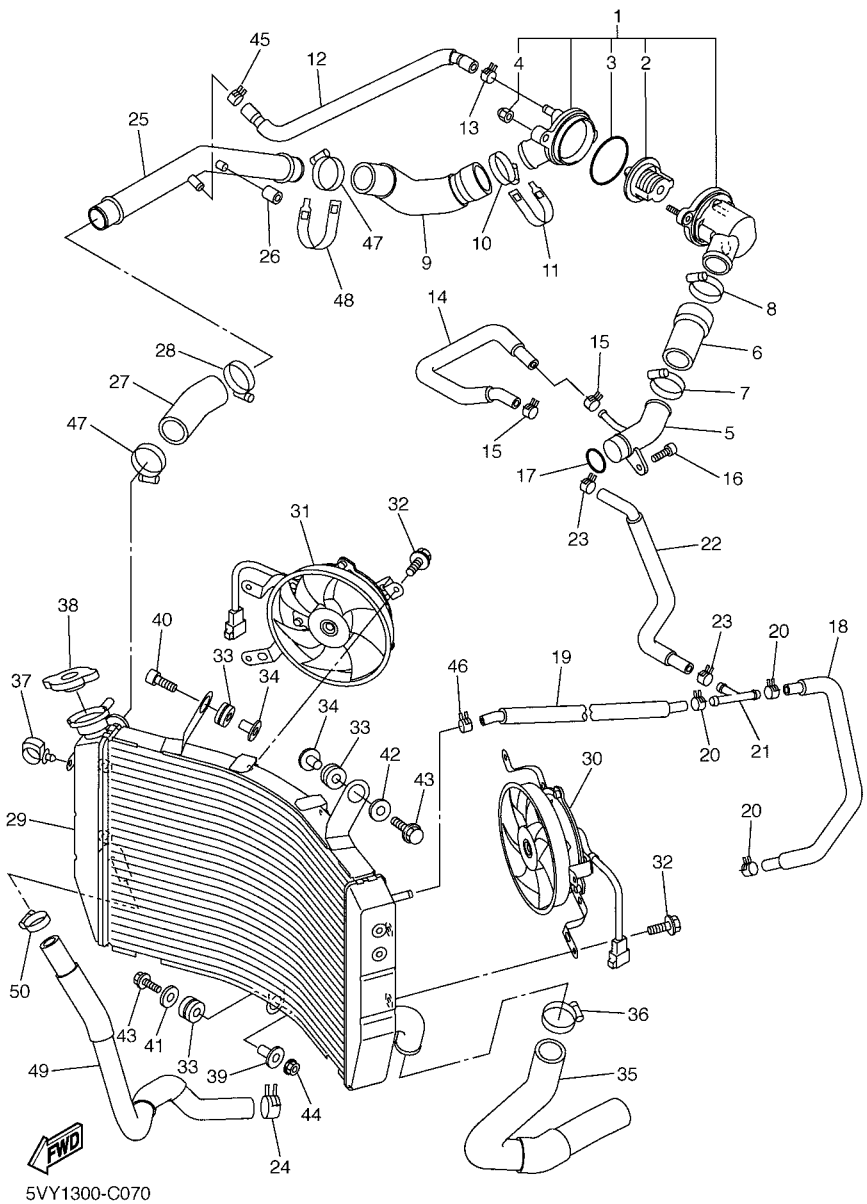

FIG. 7 RADIATOR & HOSE

REF. NO.	PART NO.	DESCRIPTION	5VY4	5VY5	5VY6			REMARKS
1	5VY–12410–00	THERMOSTAT ASSY	1	1	1			
2	5LP–12411–00	.THERMOSTAT	1	1	1			
3	93210–49046	.O-RING	1	1	1			
4	90176–06065	.NUT, CROWN	2	2	2			
5	5VY–12485–00	PIPE 5	1	1	1			
6	5VY–12579–00	HOSE 4	1	1	1			
7	90450–35001	HOSE CLAMP ASSY	1	1	1			
8	90450–38040	HOSE CLAMP ASSY	1	1	1			
9	5VY–12577–00	HOSE 2	1	1	1			
10	90450–38040	HOSE CLAMP ASSY	1	1	1			
11	5GV–1246A–00	COVER 1	1	1	1			
12	5VY–12552–00	HOSE 8	1	1	1			
13	90467–11044	CLIP	1	1	1			
14	5VY–1243F–00	HOSE,3	1	1	1			
15	90467–11090	CLIP	2	2	2			
16	90110–06004	BOLT, HEXAGON SOCKET HEAD	1	1	1			
17	93210–235A1	O-RING	1	1	1			
18	5VY–1243A–00	HOSE 1	1	1	1			
19	5VY–1244G–00	HOSE, 4	1	1	1			
20	90467–11090	CLIP	3	3	3			
21	90413–07023	WAY 3	1	1	1			
22	5VY–1243E–00	HOSE 2	1	1	1			
23	90467–11090	CLIP	2	2	2			
24	90467–200A0	CLIP	1	1	1			
25	5VY–12483–00	PIPE 3	1	1	1			
26	90445–11418	HOSE (L18)	1	1	1			
27	5VY–12578–00	HOSE 3	1	1	1			

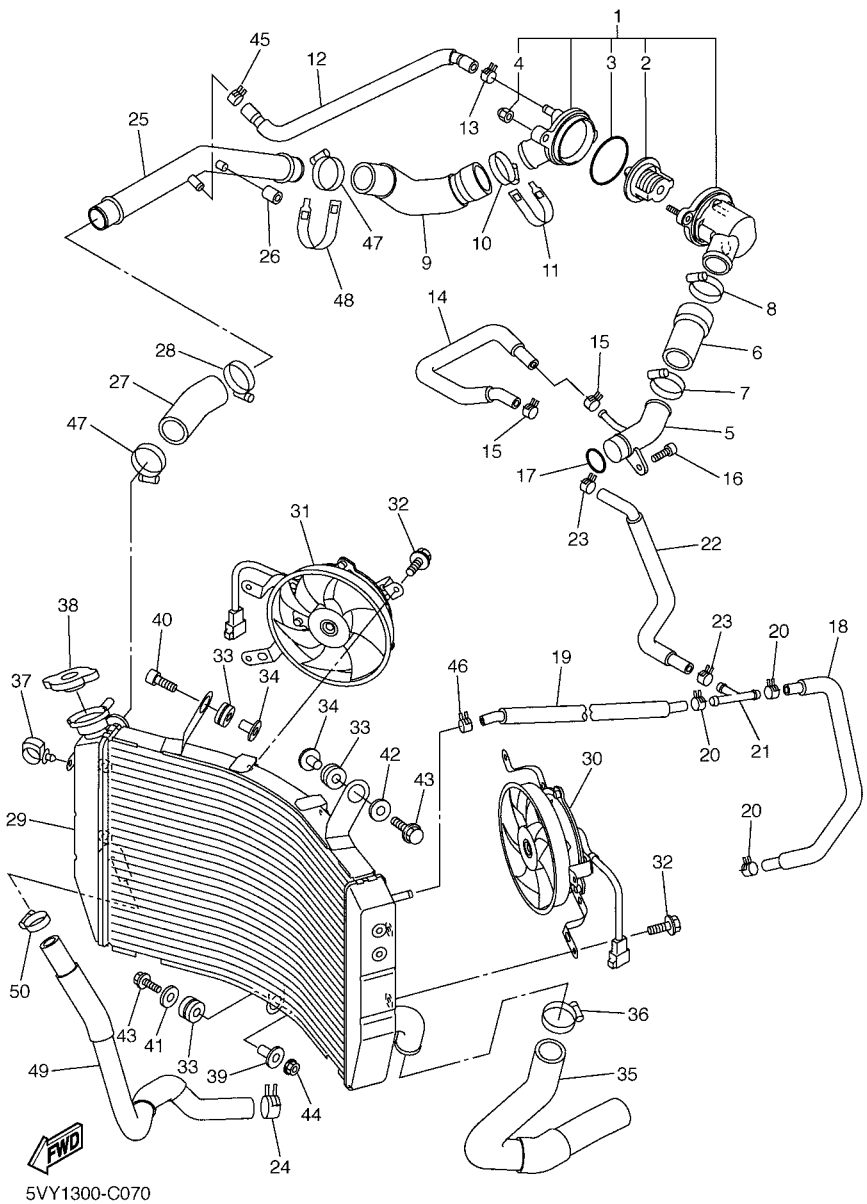

FIG. 7 RADIATOR & HOSE

REF. NO.	PART NO.	DESCRIPTION	5VY4	5VY5	5VY6			REMARKS
28	90450–35001	HOSE CLAMP ASSY	1	1	1			
29	5VY–12461–00	RADIATOR ASSY	1	1	1			
30	5VY–12405–00	BLOWER ASSY	1	1	1			
31	5VY–12405–10	BLOWER ASSY	1	1	1			
32	5GJ–12675–00	BOLT, BLOWER HOLDING	6	6	6			
33	90480–15363	GROMMET	3	3	3			
34	90387–0614M	COLLAR	2	2	2			
35	5VY–12551–00	HOSE 7	1	1	1			
36	90450–35001	HOSE CLAMP ASSY	1	1	1			
37	90464–13249	CLAMP	1	1	1			
38	5SL–12462–00	CAP, RADIATOR	1	1	1			
39	90387–0614M	COLLAR	1	1	1			
40	91317–06030	BOLT	1	1	1			
41	90201–06071	WASHER, PLATE	1	1	1			
42	90201–06074	WASHER, PLATE	1	1	1			
43	95827–06030	BOLT, FLANGE	2	2	2			
44	95607–06200	NUT, SELF U-FLANGE	1	1	1			
45	90467–12191	CLIP	1	1	1			
46	90467–11090	CLIP	1	1	1			
47	90450–35001	HOSE CLAMP ASSY	2	2	2			
48	5GV–1246E–00	COVER 2	1	1	1			
49	5VY–12589–01	HOSE 6	1	1	1			
50	90450–22017	HOSE CLAMP ASSY	1	1	1			

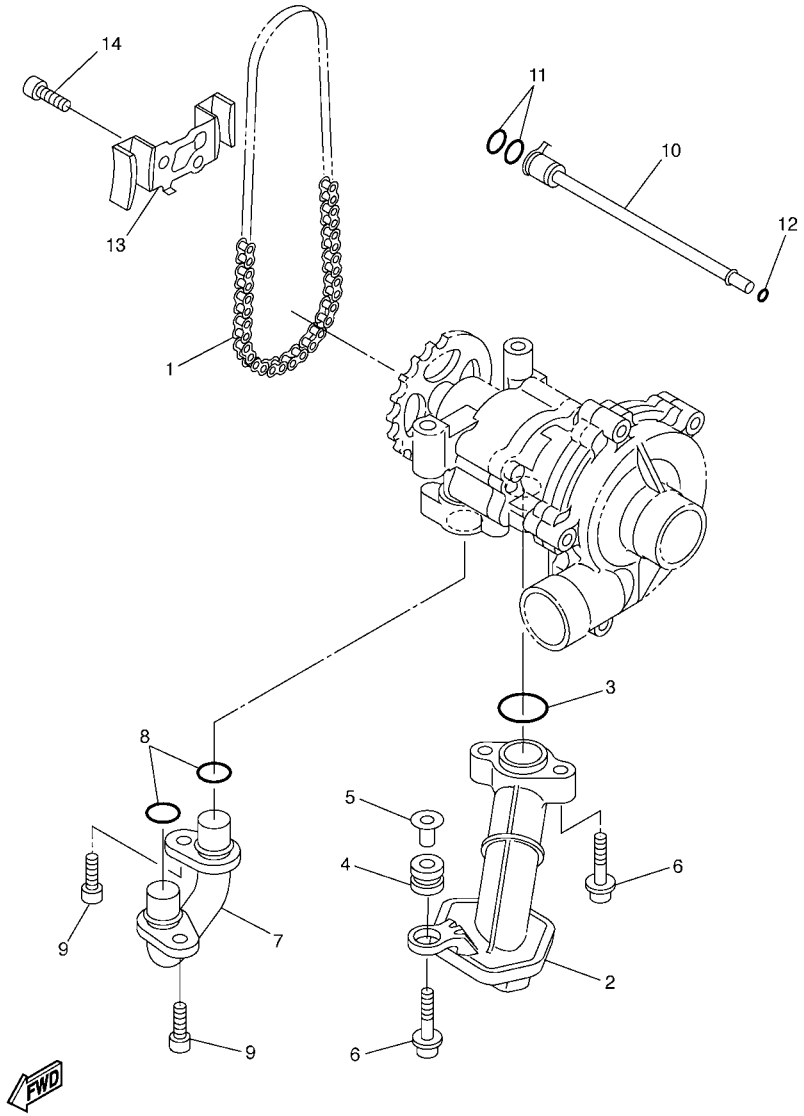

5VY1300-C080

FIG. 8 OIL PUMP

REF. NO.	PART NO.	DESCRIPTION	5VY4	5VY5	5VY6			REMARKS
1	94580–25078	CHAIN (DID25 78LE)	1	1	1			
2	5VY–13410–00	STRAINER HOUSING ASSY	1	1	1			
3	93210–22298	O-RING	1	1	1			
4	90480–13010	GROMMET	1	1	1			
5	5VY–13117–00	COLLAR, DISTANCE	1	1	1			
6	90110–06060	BOLT, HEXAGON SOCKET HEAD	3	3	3			
7	5VY–13416–00	PIPE, OIL 1	1	1	1			
8	93210–14003	O-RING	2	2	2			
9	90110–06041	BOLT, HEXAGON SOCKET HEAD	2	2	2			
10	5VY–1316E–00	PIPE, DELIVERY 5	1	1	1			
11	93210–09165	O-RING	2	2	2			
12	93210–06667	O-RING	1	1	1			
13	5VY–13898–00	HOLDER	1	1	1			
14	90110–06018	BOLT, HEXAGON SOCKET HEAD	2	2	2			

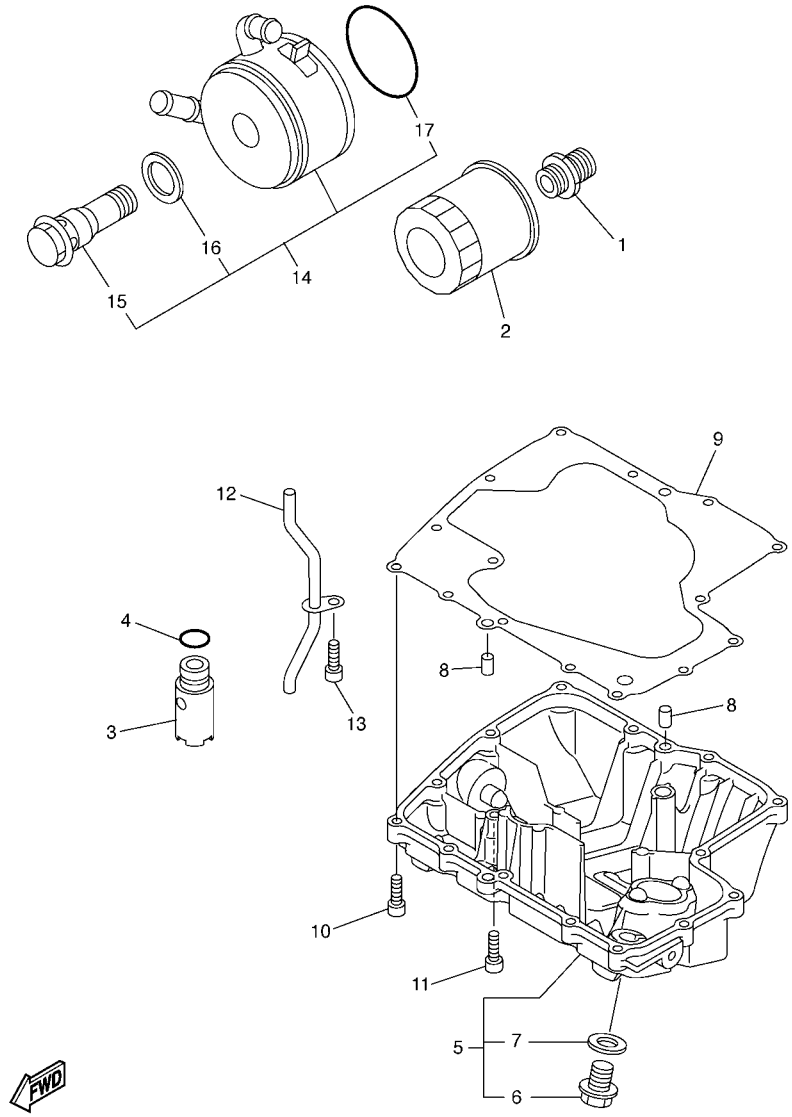

5VY1300-C090

FIG. 9 OIL CLEANER

REF. NO.	PART NO.	DESCRIPTION	5VY4	5VY5	5VY6			REMARKS
1	90401–20145	BOLT, UNION	1	1	1			
2	5GH–13440–00	ELEMENT ASSY, OIL CLEANER	1	1	1			
3	5VY–13490–00	RELIEF VALVE ASSY	1	1	1			
4	93210–15566	O-RING	1	1	1			
5	5VY–13417–00	COVER, STRAINER	1	1	1			
6	90340–14132	.PLUG, STRAIGHT SCREW	1	1	1			
7	214–11198–01	.GASKET	1	1	1			
8	99530–08012	PIN, DOWEL	2	2	2			
9	5VY–13414–01	GASKET, STRAINER COVER	1	1	1			
10	91317–06025	BOLT	14	14	14			
11	90110–06020	BOLT, HEXAGON SOCKET HEAD	1	1	1			
12	5VY–13161–00	PIPE, DELIVERY 1	1	1	1			
13	90110–06018	BOLT, HEXAGON SOCKET HEAD	1	1	1			
14	5VY–13470–00	OIL COOLER ASSY	1	1	1			
15	5EB–12822–00	.BOLT, UNION	1	1	1			
16	5EB–13475–00	.GASKET	1	1	1			
17	5JW–13473–00	.O-RING	1	1	1			

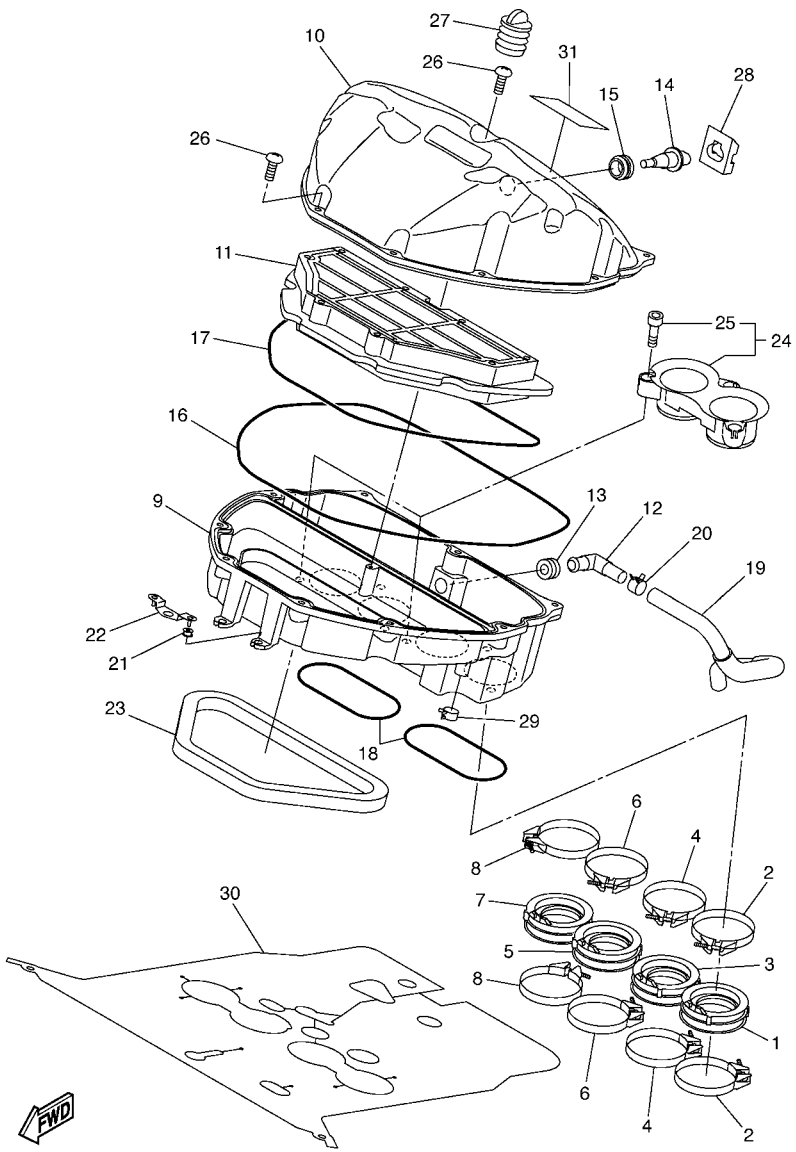

5VY4100-C100

FIG. 10 INTAKE

REF. NO.	PART NO.	DESCRIPTION	5VY4	5VY5	5VY6			REMARKS
1	5VY–13595–00	JOINT	1	1	1			
2	90450–62001	HOSE CLAMP ASSY	2	2	2			
3	5VY–13596–00	JOINT, CARBURETOR 2	1	1	1			
4	90450–62001	HOSE CLAMP ASSY	2	2	2			
5	5VY–13597–00	JOINT, CARBURETOR 3	1	1	1			
6	90450–62001	HOSE CLAMP ASSY	2	2	2			
7	5VY–13598–00	JOINT, CARBURETOR 4	1	1	1			
8	90450–62001	HOSE CLAMP ASSY	2	2	2			
9	5VY–14411–00	CASE, AIR CLEANER 1	1	1	1			
10	5VY–14421–00	CASE, AIR CLEANER 2	1	1	1			
11	5VY–14451–00	ELEMENT, AIR CLEANER	1	1	1			
12	5VY–14419–00	PIPE	1	1	1			
13	31A–14435–00	GROMMET	1	1	1			
14	5CA–85886–00	SENSOR, AIR TEMPRATURE	1	1	1			
15	5VY–14435–00	GROMMET	1	1	1			
16	5VY–14452–00	SEAL	1	1	1			
17	5VY–14462–00	SEAL	1	1	1			
18	5VY–14457–00	SEAL	2	2	2			
19	5VY–15393–00	PIPE, BREATHER 2	2	2	2			
20	90467–160A1	CLIP	1	1	1			
21	90480–08264	GROMMET	2	2	2			
22	5VY–14498–00	STAY 1	1	1	1			
23	5VY–14467–00	SEAL	1	1	1			
24	5VY–1440B–00	JOINT ASSY	2	2	2			
25	90109–05005	.BOLT	3	3	3			
26	90154–05004	SCREW, BINDING	10	10	10			
27	5VY–14862–00	PLUG	1	1	1			

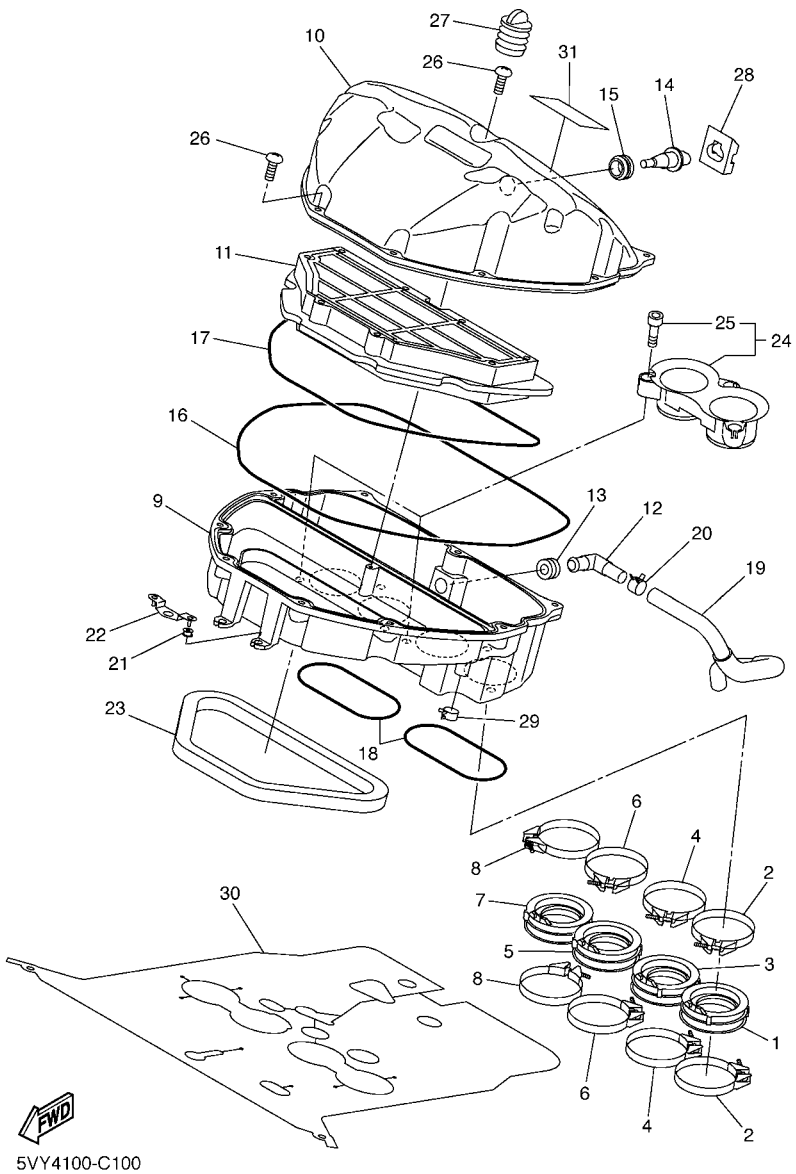

FIG. 10 INTAKE

REF. NO.	PART NO.	DESCRIPTION	5VY4	5VY5	5VY6			REMARKS
28	5VY–14425–00	DAMPER 1	1	1	1			
29	90467–14015	CLIP	1	1	1			
30	5VY–12682–00	PROTECTOR, HEAT	1	1	1			
31	5VY–2179V–00	PLATE, EPA 1(NON CALIFORNIA)	1					
	5VY–2179R–00	PLATE, EPA 2 (CALIFORNIA)		1				

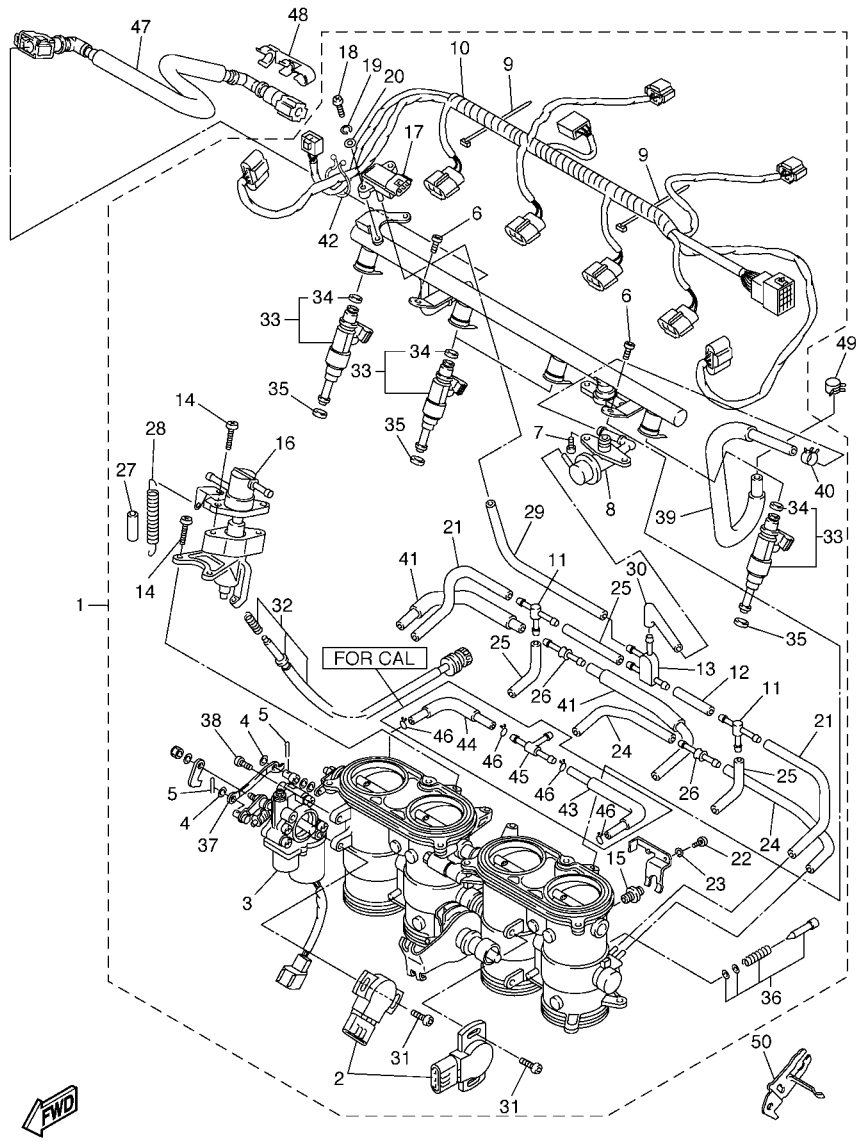

5VY4100-C110

FIG. 11 INTAKE 2

REF. NO.	PART NO.	DESCRIPTION	5VY4	5VY5	5VY6			REMARKS
1	5VY–13750–00	THROTTLE BODY ASSY	1		1			
	5VY–13750–10	THROTTLE BODY ASSY		1				
2	5FL–85885–01	.THROTTLE SENSOR ASSY	2	2	2			
3	5VY–85850–00	.GEARED MOTOR COMP.	1	1	1			
4	22U–14952–00	.WASHER	2	2	2			
5	91492–12010	.PIN, COTTER	2	2	2			
6	98507–06012	.SCREW, PAN HEAD	2	2	2			
7	98507–05008	.SCREW, PAN HEAD	2	2	2			
8	5VY–13906–00	.REGULATOR, PRESSURE	1	1	1			
9	4KM–14137–00	.CLIP	5	5	5			
10	5VY–82386–00	.EXTENSION, WIRE HARNESS	1	1	1			
11	68V–24376–00	.PIPE, JOINT 1	2	2	2			
12	5JW–14396–00	.PIPE	1	1	1			
13	5PW–1410F–00	.CONNECTOR	1	1	1			
14	98507–05014	.SCREW, PAN HEAD	4	4	4			
15	5VY–14171–00	.PLUNGER, STARTER	2	2	2			
16	5VY–14204–00	.CASE, STARTER	1	1	1			
17	5VX–82380–00	.SENSOR, PRESSURE	1	1	1			
18	98507–05016	.SCREW, PAN HEAD	2	2	2			
19	92907–05100	.WASHER, SPRING	2	2	2			
20	92907–05600	.WASHER, PLATE	2	2	2			
21	5FL–14349–10	.PIPE	2	2	2			
22	98507–03016	.SCREW, PAN HEAD	4	4	4			
23	92990–03100	.WASHER, SPRING	4	4	4			
24	5PW–14349–00	.PIPE	2	2	2			
25	5PS–14987–00	.HOSE	3	3	3			
26	5PW–14251–00	.NIPPLE	2	2	2			

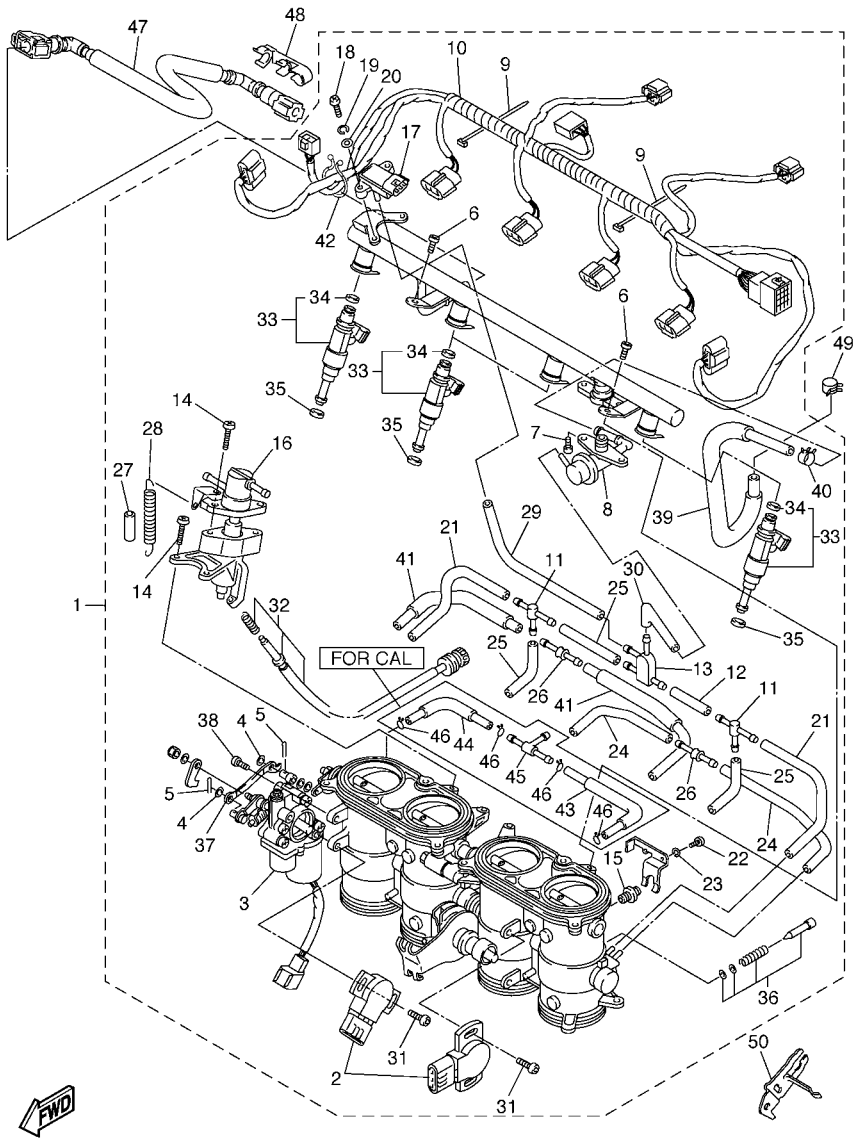

5VY4100-C110

FIG. 11 INTAKE 2

REF. NO.	PART NO.	DESCRIPTION	5VY4	5VY5	5VY6			REMARKS
27	5DM–14936–00	.SEAT, SPRING	1	1	1			
28	5JW–14589–00	.SPRING	1	1	1			
29	5SL–14349–00	.PIPE	1	1	1			
30	5VY–14348–00	.PIPE 1	1	1	1			
31	8CC–14216–10	.SCREW	4	4	4			
32	5PW–14103–00	.THROTTLE SCREW SET	1	1	1			
33	5VY–13761–00	.INJECTOR ASSY	4	4	4			
34	5PS–14147–00	..O-RING	1	1	1			
35	90430–09002	.GASKET	4	4	4			
36	5JW–14104–00	.AIR SCREW SET	2	2	2			
37	5VY–14905–00	.LEVER, STARTER	1	1	1			
38	98507–06020	.SCREW, PAN HEAD	2	2	2			
39	5VY–13972–00	.PIPE, FUEL 2	1	1	1			
40	90467–120A1	.CLIP	1	1	1			
41	5VY–13543–00	.HOSE, AIR	2	2	2			
42	90464–30040	.CLAMP	1	1	1			
43	5VY–14465–00	.PIPE		1				
44	5VY–14466–00	.PIPE		1				
45	90413–08012	.WAY 3		1				
46	90467–09006	.CLIP		4				
47	5VY–13971–00	PIPE, FUEL 1	1	1	1			
48	90464–16005	CLAMP	1	1	1			
49	90467–12003	CLIP	1	1	1			
50	5VY–14413–00	STAY	1	1	1			

FIG. 12 AIR INDUCTION SYSTEM

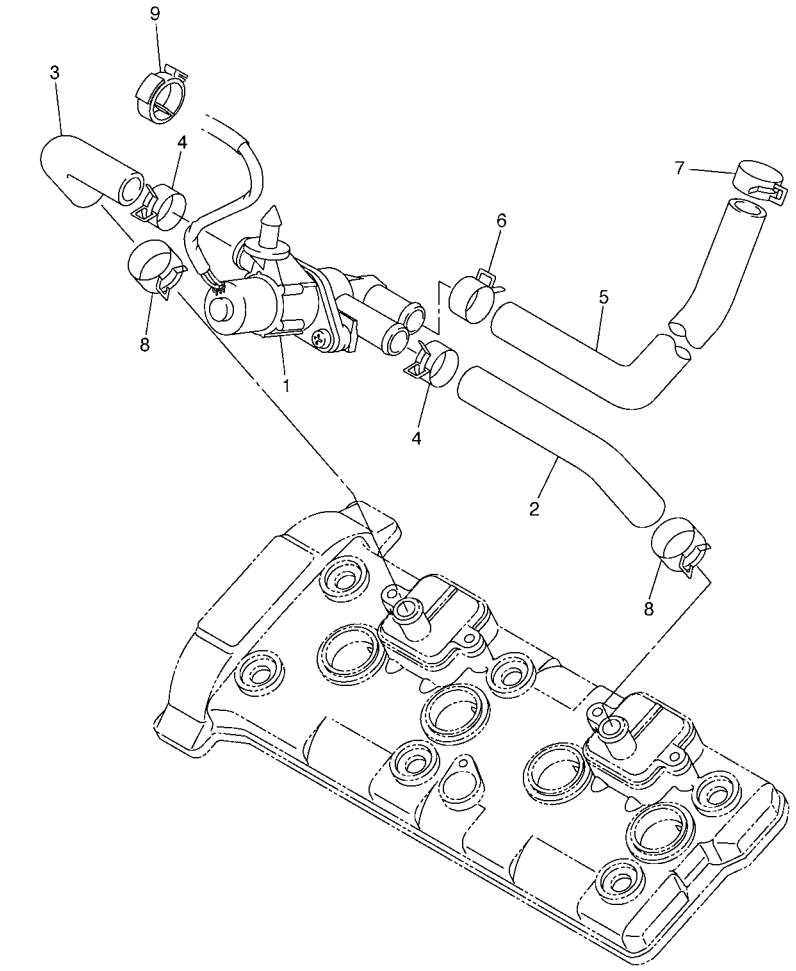

5VY1300-C120

REF. NO.	PART NO.	DESCRIPTION	5VY4	5VY5	5VY6			REMARKS
1	5VY–14840–00	AIR CUT VALVE ASS'Y	1	1	1			
2	5VY–14881–00	HOSE, BEND 1	1	1	1			
3	5VY–14882–00	HOSE, BEND 2	1	1	1			
4	90467–18172	CLIP	2	2	2			
5	5VY–14883–00	HOSE, BEND 3	1	1	1			
6	90467–18172	CLIP	1	1	1			
7	90467–17128	CLIP	1	1	1			
8	90467–180A0	CLIP	2	2	2			
9	90464–30003	CLAMP	1	1	1			

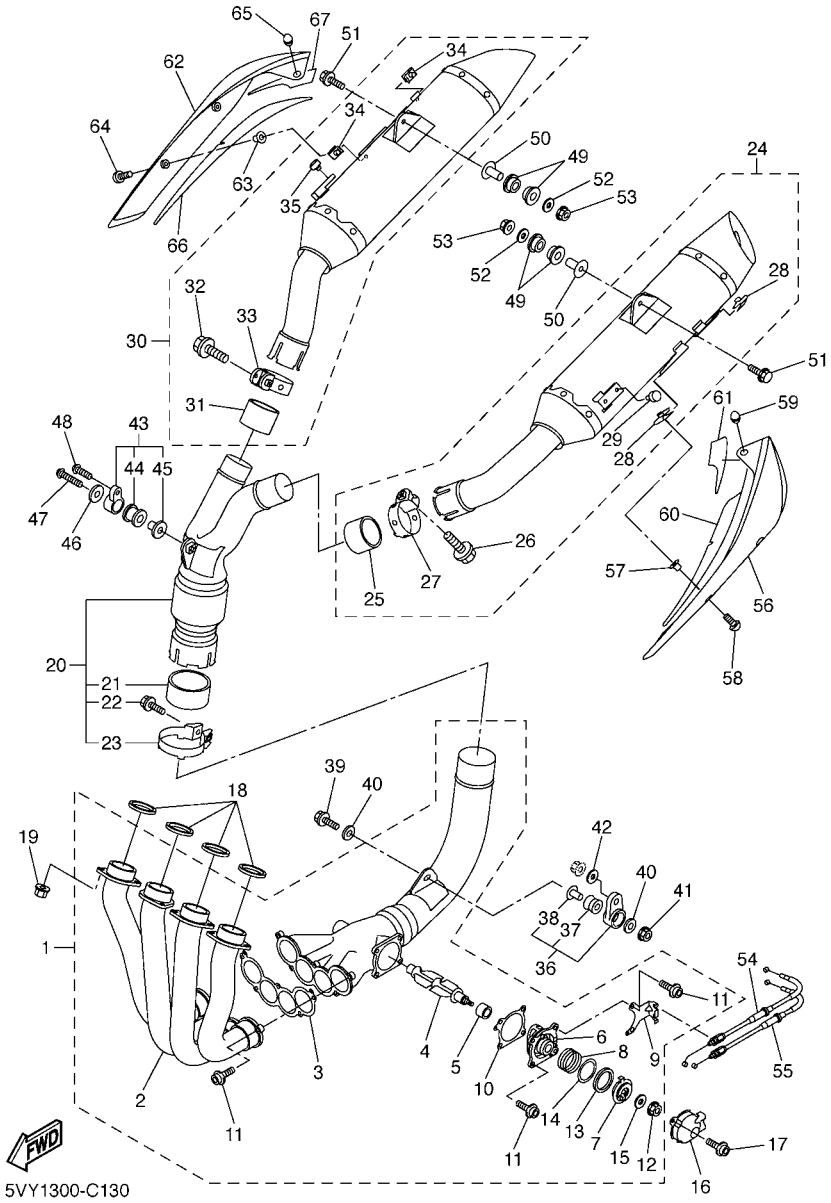

FIG. 13 EXHAUST

REF. NO.	PART NO.	DESCRIPTION	5VY4	5VY5	5VY6			REMARKS
1	5VY–14610–00	EXHAUST PIPE ASSY 1	1	1	1			
2	5VY–14602–00	.EXHAUST PIPE COMP.	1	1	1			
3	5VY–14623–00	.GASKET, EXHAUST PIPE	1	1	1			
4	5VY–14821–00	.ARM, SHAFT (VALVE)	1	1	1			
5	5VY–14638–00	.COLLAR	1	1	1			
6	5VY–14811–00	.HOUSING	1	1	1			
7	5VY–14865–00	.PULLEY	1	1	1			
8	5VY–14856–00	.SPRING	1	1	1			
9	5VY–14867–00	.BRACKET	1	1	1			
10	5VY–14643–00	.GASKET 3	1	1	1			
11	90110–06110	.BOLT, HEXAGON SOCKET HEAD	7	7	7			
12	90179–06M28	.NUT	1	1	1			
13	5VY–14648–00	.COLLAR 2	1	1	1			
14	5VY–14674–00	.VALVE, PLATE	1	1	1			
15	92990–06200	.WASHER, PLAIN	1	1	1			
16	5VY–14826–00	PROTECTOR, EXHAUST	1	1	1			
17	90110–06110	BOLT, HEXAGON SOCKET HEAD	2	2	2			
18	4FM–14613–00	GASKET, EXHAUST PIPE	4	4	4			
19	90179–08410	NUT	8	8	8			
20	5VY–14740–00	CATALYST ASSY.	1	1	1			
21	5VY–14755–00	.GASKET, SILENCER	1	1	1			
22	95814–08030	.BOLT, FLANGE	1	1	1			
23	5JJ–14715–00	.BAND, MUFFLER	1	1	1			
24	5VY–14710–10	MUFFLER ASSY 1	1	1	1			
25	5VY–14714–00	.GASKET, MUFFLER	1	1	1			
26	90105–08063	.BOLT, FLANGE	1	1	1			
27	5VY–14715–00	.BAND, MUFFLER	1	1	1			

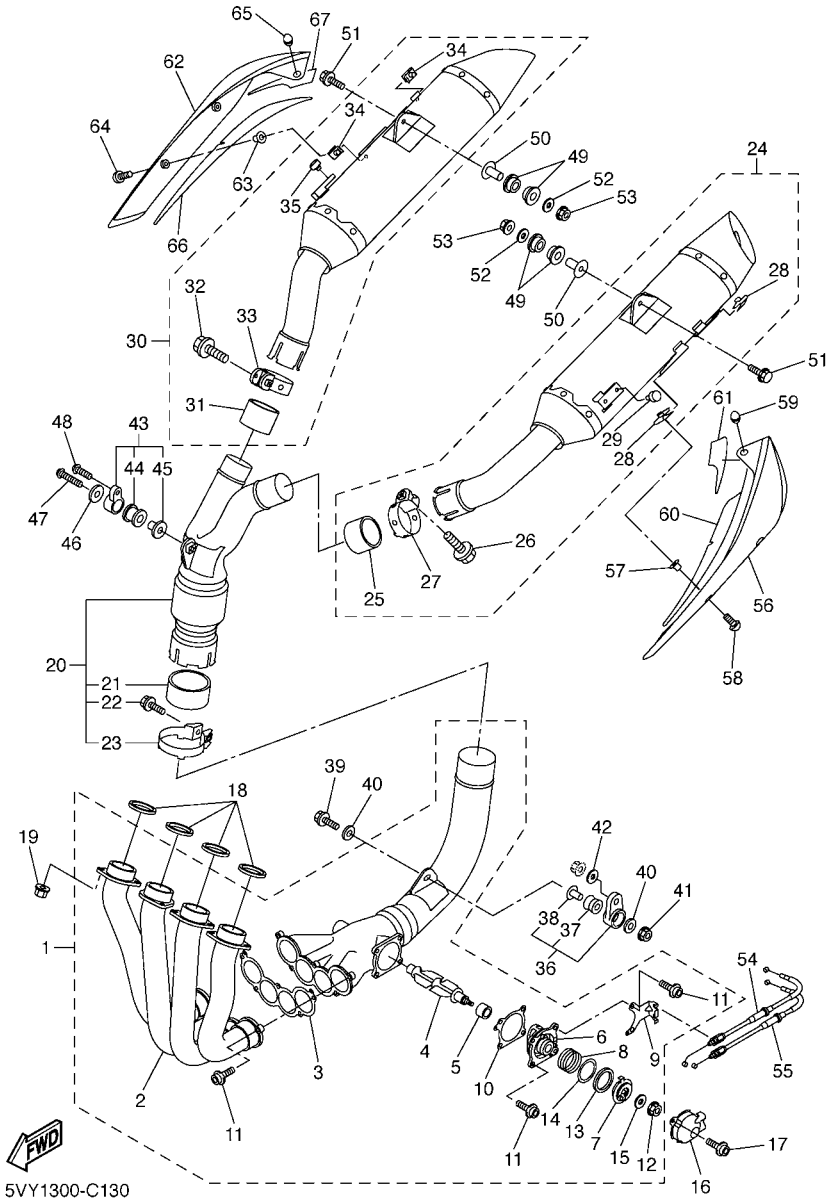

FIG. 13 EXHAUST

REF. NO.	PART NO.	DESCRIPTION	5VY4	5VY5	5VY6			REMARKS
28	90183–060A2	.NUT, SPRING	2	2	2			
29	90338–06007	.PLUG	1	1	1			
30	5VY–14720–10	MUFFLER ASSY 2	1	1	1			
31	5VY–14714–00	.GASKET, MUFFLER	1	1	1			
32	90105–08063	.BOLT, FLANGE	1	1	1			
33	5VY–14715–00	.BAND, MUFFLER	1	1	1			
34	90183–060A2	.NUT, SPRING	2	2	2			
35	90338–06007	.PLUG	1	1	1			
36	5VY–21890–00	STAY ASSY. ,2	1	1	1			
37	5VY–14747–00	.DAMPER, MUFFLER	1	1	1			
38	90387–08021	.COLLAR	1	1	1			
39	95817–08040	BOLT, FLANGE	1	1	1			
40	90201–087G2	WASHER, PLATE	2	2	2			
41	95604–08200	NUT, U FLANGE	1	1	1			
42	90201–10054	WASHER, PLATE	1	1	1			
43	5VY–21880–00	STAY ASSY. ,1	1	1	1			
44	4XV–27424–00	.DAMPER, FOOTREST 2	1	1	1			
45	90387–08005	.COLLAR	1	1	1			
46	90201–08034	WASHER, PLATE	1	1	1			
47	92014–08040	BOLT, BUTTON HEAD	1	1	1			
48	90111–08016	BOLT	1	1	1			
49	5VY–27424–00	DAMPER, FOOTREST 2	4	4	4			
50	90387–08020	COLLAR	2	2	2			
51	95814–08045	BOLT, FLANGE	2	2	2			
52	90201–08034	WASHER, PLATE	2	2	2			
53	95604–08200	NUT, U FLANGE	2	2	2			
54	5VY–1133E–00	CABLE, PULLEY 1	1	1	1			

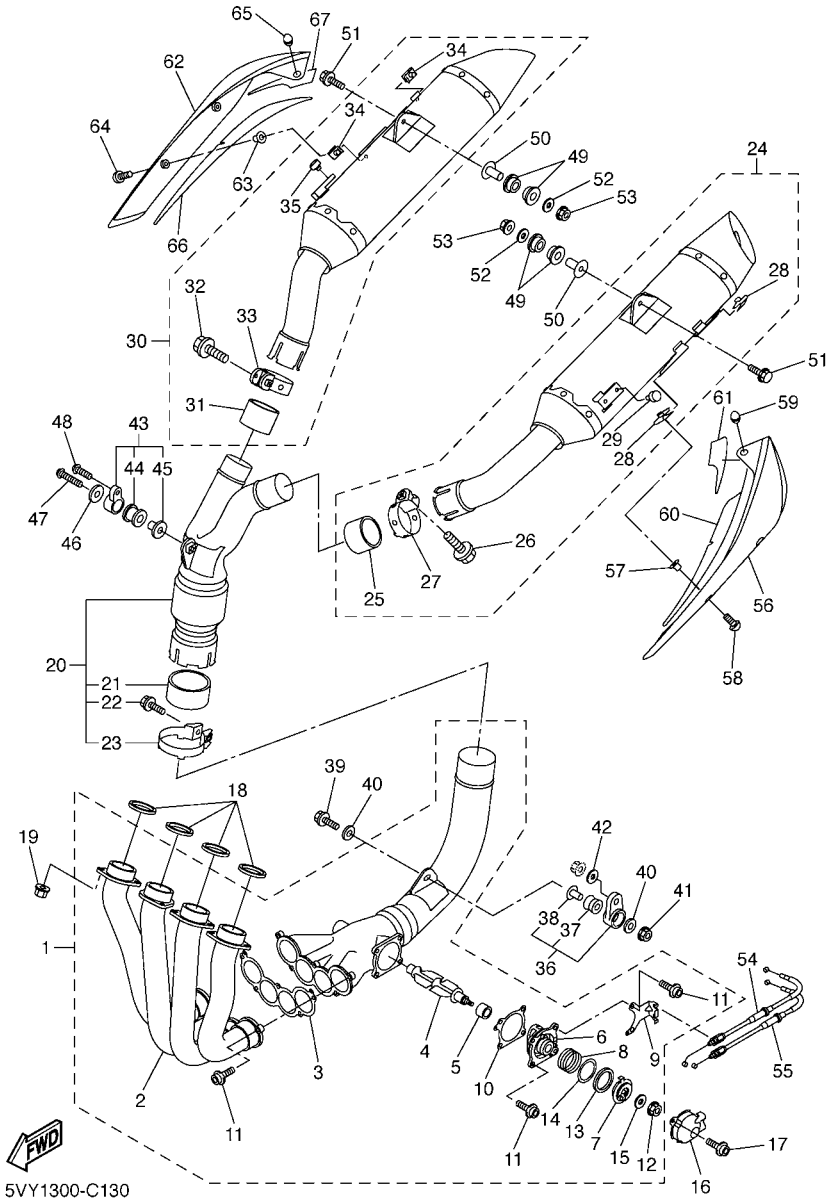

FIG. 13 EXHAUST

REF. NO.	PART NO.	DESCRIPTION	5VY4	5VY5	5VY6			REMARKS
55	5VY–1133F–00	CABLE, PULLEY 2	1	1	1			
56	5VY–14718–01–P0	PROTECTOR, MUFFLER 1	1	1	1			MT2
57	90387–062L2	COLLAR	2	2	2			
58	90111–06038	BOLT	2	2	2			
59	5VY–14757–00	DAMPER, MUFFLER 2	1	1	1			
60	5VY–1475P–00	SEAT,1	1	1	1			
61	5VY–1477P–00	SEAT,3	1	1	1			
62	5VY–14728–01–P0	PROTECTOR, MUFFLER 2	1	1	1			MT2
63	90387–062L2	COLLAR	2	2	2			
64	90111–06038	BOLT	2	2	2			
65	5VY–14757–00	DAMPER, MUFFLER 2	1	1	1			
66	5VY–1476P–00	SEAT,2	1	1	1			
67	5VY–1478P–00	SEAT,4	1	1	1			

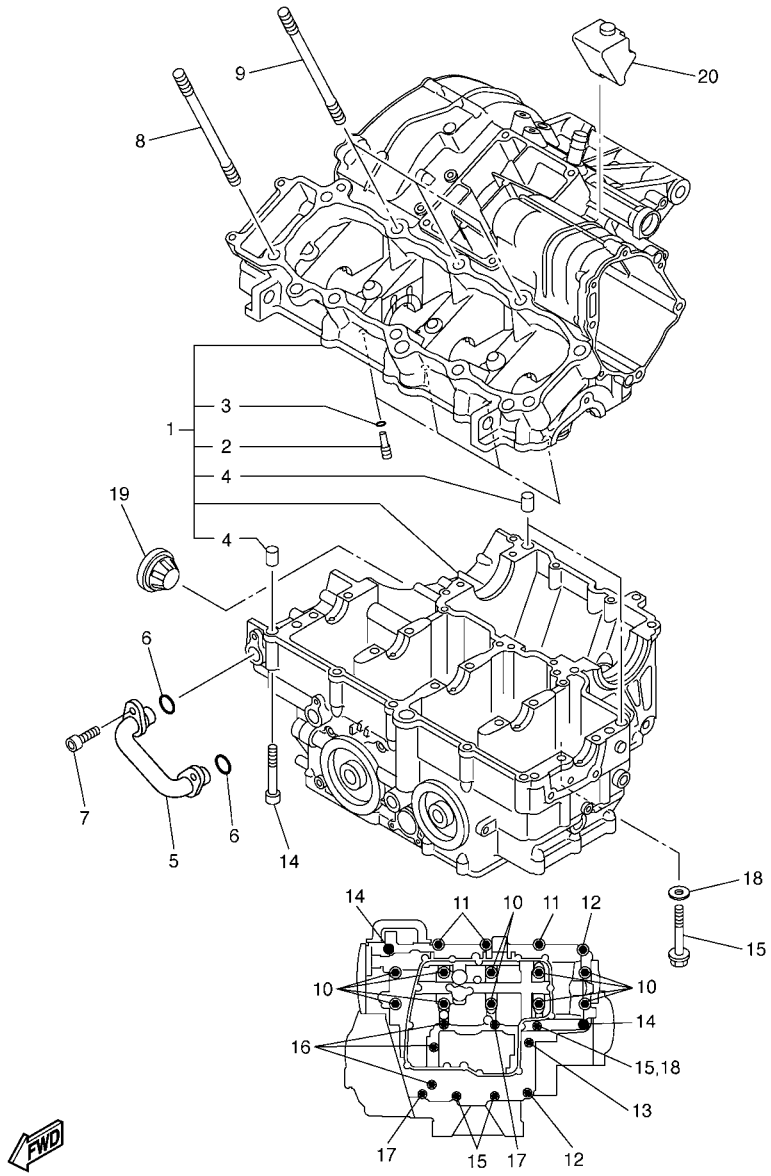

5VY1300-C140

FIG. 14 CRANKCASE

REF. NO.	PART NO.	DESCRIPTION	5VY4	5VY5	5VY6			REMARKS
1	5VY–15100–00	CRANKCASE ASSY	1	1	1			
2	5EB–15155–00	.NOZZLE 3	4	4	4			
3	93210–04092	.O-RING	4	4	4			
4	99530–10014	.PIN, DOWEL	3	3	3			
5	5VY–13418–00	PIPE, OIL 2	1	1	1			
6	93210–14003	O-RING	2	2	2			
7	90110–06041	BOLT, HEXAGON SOCKET HEAD	2	2	2			
8	90116–10020	BOLT, STUD	7	7	7			
9	90116–10023	BOLT, STUD	3	3	3			
10	90119–09003	BOLT, WITH WASHER	10	10	10			
11	95817–08050	BOLT, FLANGE	3	3	3			
12	95817–08060	BOLT, FLANGE	2	2	2			
13	90105–08015	BOLT, FLANGE	1	1	1			
14	90109–06063	BOLT	2	2	2			
15	95817–06060	BOLT, FLANGE	3	3	3			
16	95817–06070	BOLT, FLANGE	3	3	3			
17	95817–06050	BOLT, FLANGE	2	2	2			
18	90430–06166	GASKET	1	1	1			
19	5PW–15361–00	GAUGE, LEVEL	1	1	1			
20	5VY–15316–00	DAMPER, ENGINE MOUNT 1	1	1	1			

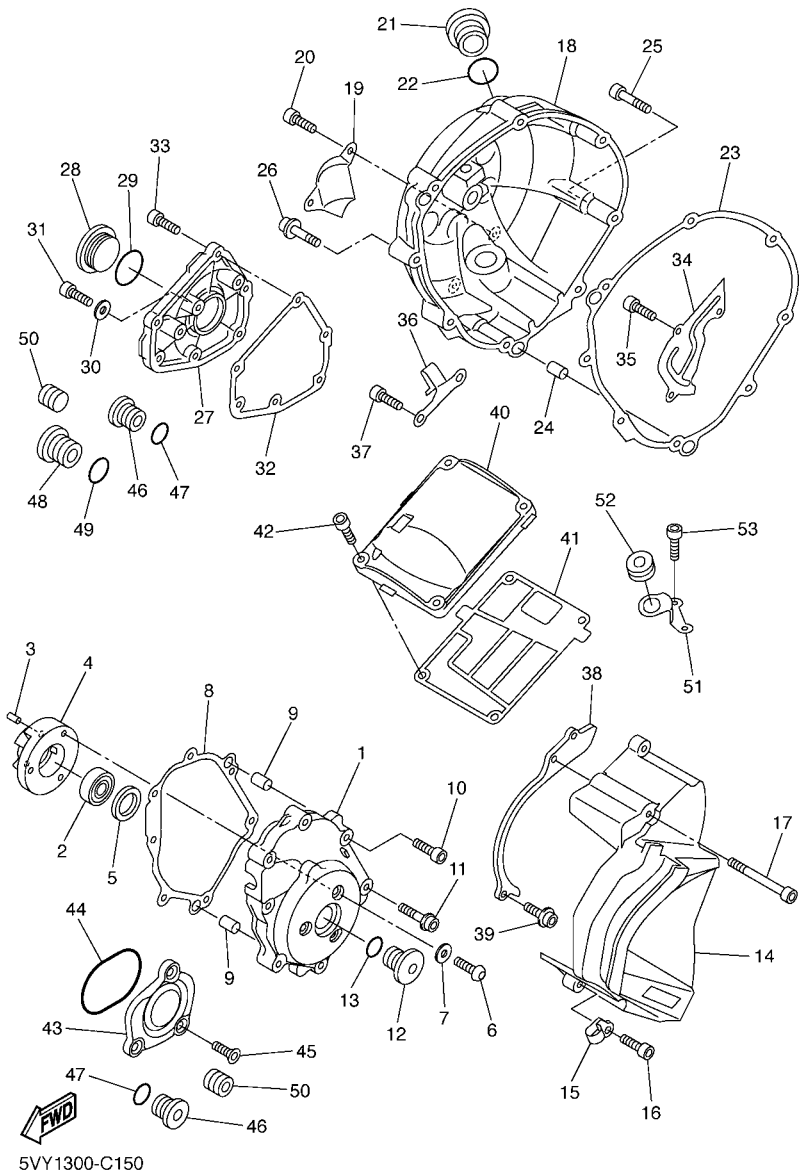

FIG. 15 CRANKCASE COVER 1

REF. NO.	PART NO.	DESCRIPTION	5VY4	5VY5	5VY6			REMARKS
1	5VY–15411–00	COVER, CRANKCASE 1	1	1	1			
2	93306–20124	BEARING	1	1	1			
3	93605–10108	PIN, DOWEL	2	2	2			
4	5VY–15164–00	HOUSING, BEARING 2	1	1	1			
5	5VY–15542–00	COLLAR 2	1	1	1			
6	90149–06020	SCREW	3	3	3			
7	90201–06431	WASHER, PLATE	3	3	3			
8	5VY–15451–00	GASKET, CRANKCASE COVER 1	1	1	1			
9	99480–10018	PIN	2	2	2			
10	90109–06031	BOLT	4	4	4			
11	90110–08068	BOLT, HEXAGON SOCKET HEAD	3	3	3			
12	5PX–15189–00	PLUG	1	1	1			
13	93210–22382	O-RING	1	1	1			
14	5VY–15418–00	COVER, CHAIN CASE	1	1	1			
15	90462–08225	CLAMP	1	1	1			
16	90110–06020	BOLT, HEXAGON SOCKET HEAD	2	2	2			
17	90110–06047	BOLT, HEXAGON SOCKET HEAD	1	1	1			
18	5VY–15421–00	COVER, CRANKCASE 2	1	1	1			
19	5VY–15499–00	PROTECTOR, COVER	1	1	1			
20	92014–06014	BOLT, BUTTON HEAD	2	2	2			
21	5VY–15362–00	PLUG, OIL LEVEL	1	1	1			
22	93210–27370	O-RING	1	1	1			
23	5VY–15461–00	GASKET, CRANKCASE COVER 2	1	1	1			
24	93610–20189	PIN, DOWEL	2	2	2			
25	90109–06016	BOLT	7	7	7			
26	90110–06112	BOLT, HEXAGON SOCKET HEAD	1	1	1			
27	5VY–15416–00	COVER, OIL PUMP	1	1	1			

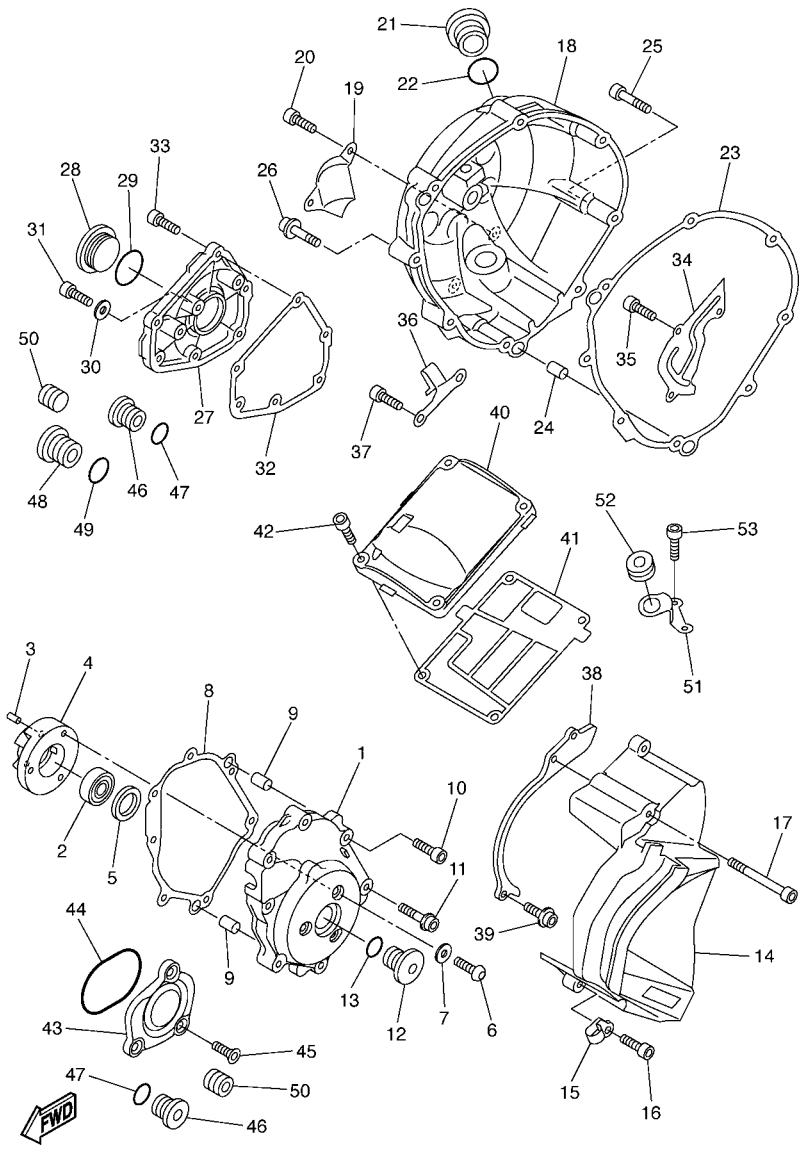

FIG. 15 CRANKCASE COVER 1

REF. NO.	PART NO.	DESCRIPTION	5VY4	5VY5	5VY6			REMARKS
28	90340–32004	PLUG, STRAIGHT SCREW	1	1	1			
29	93210–32172	O-RING	1	1	1			
30	90430–08143	GASKET	1	1	1			
31	92014–08016	BOLT, BUTTON HEAD	1	1	1			
32	5VY–15456–00	GASKET, OIL PUMP COVER 1	1	1	1			
33	90109–06014	BOLT	6	6	6			
34	5VY–11165–00	PLATE, BREATHER	1	1	1			
35	90110–06018	BOLT, HEXAGON SOCKET HEAD	3	3	3			
36	5VY–15441–00	HOLDER, CLUTCH CABLE	1	1	1			
37	91314–06014	BOLT	1	1	1			
38	5VY–15113–00	PLATE	1	1	1			
39	90110–06004	BOLT, HEXAGON SOCKET HEAD	2	2	2			
40	5VY–15413–00	COVER	1	1	1			
41	5VY–15462–00	GASKET, CRANKCASE COVER 3	1	1	1			
42	90109–06015	BOLT	4	4	4			
43	5VY–15431–00	COVER, CRANKCASE 3	1	1	1			
44	93210–57001	O-RING	1	1	1			
45	90151–06014	SCREW, COUNTERSUNK	3	3	3			
46	36Y–15189–00	PLUG	3	3	3			
47	93210–16325	O-RING	3	3	3			
48	4H7–15189–00	PLUG	1	1	1			
49	93210–22382	O-RING	1	1	1			
50	90340–12112	PLUG, STRAIGHT SCREW	2	2	2			
51	5VY–12443–00	STAY	1	1	1			
52	90480–13398	GROMMET	1	1	1			
53	91380–06014	BOLT	2	2	2			

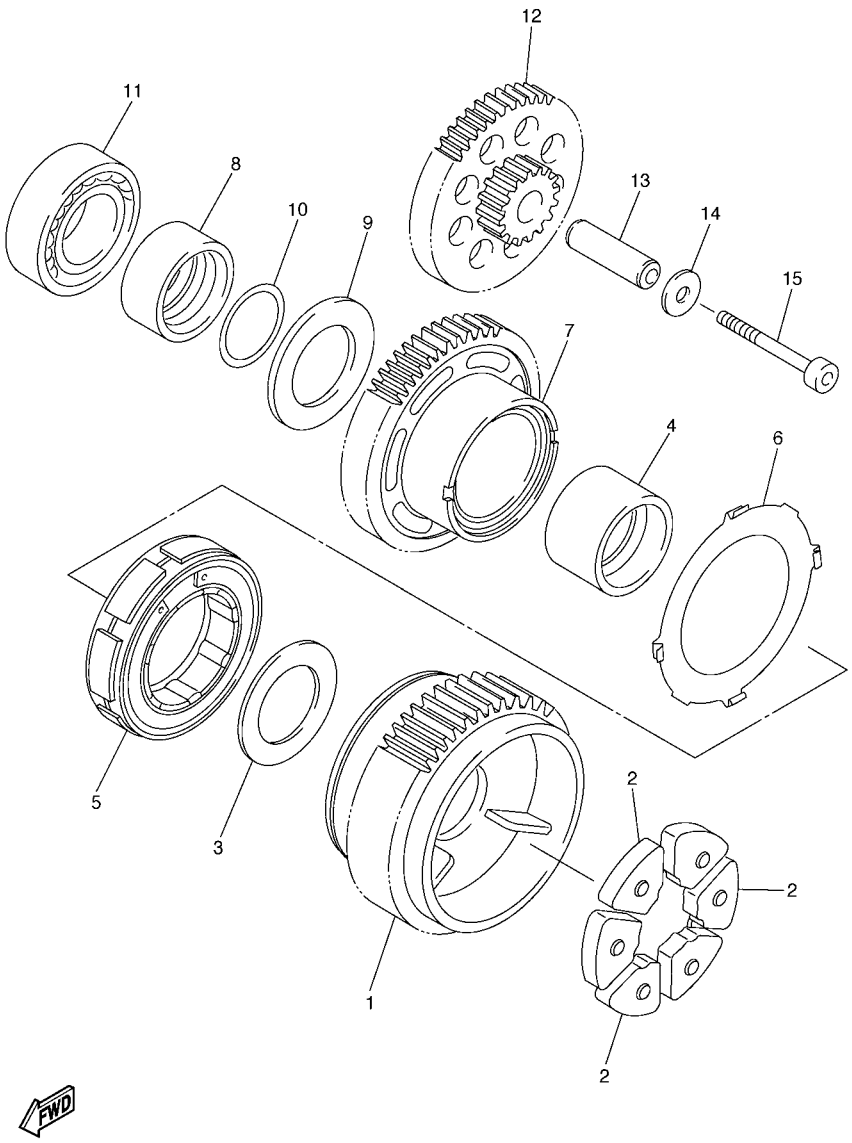

5VY1300-C160

FIG. 16 STARTER

REF. NO.	PART NO.	DESCRIPTION	5VY4	5VY5	5VY6			REMARKS
1	5VY–11537–00	GEAR, DRIVEN	1	1	1			
2	5VY–16155–00	ABSORBER 1	3	3	3			
3	90201–20016	WASHER, PLATE	1	1	1			
4	5VY–11478–00	COLLAR	1	1	1			
5	5VY–15570–00	STARTER CLUTCH ASSY	1	1	1			
6	5VY–15586–00	PLATE, STARTER CLUTCH ASSY	1	1	1			
7	5VY–15515–00	GEAR 3	1	1	1			
8	5VY–11445–00	SPACER	1	1	1			
9	90201–20017	WASHER, PLATE	1	1	1			
10	93210–18397	O-RING	1	1	1			
11	93306–20230	BEARING	1	1	1			
12	5VY–15517–00	GEAR, IDLER 2	1	1	1			
13	5VY–15521–00	SHAFT 1	1	1	1			
14	90201–06589	WASHER, PLATE	1	1	1			
15	90110–06063	BOLT, HEXAGON SOCKET HEAD	1	1	1			

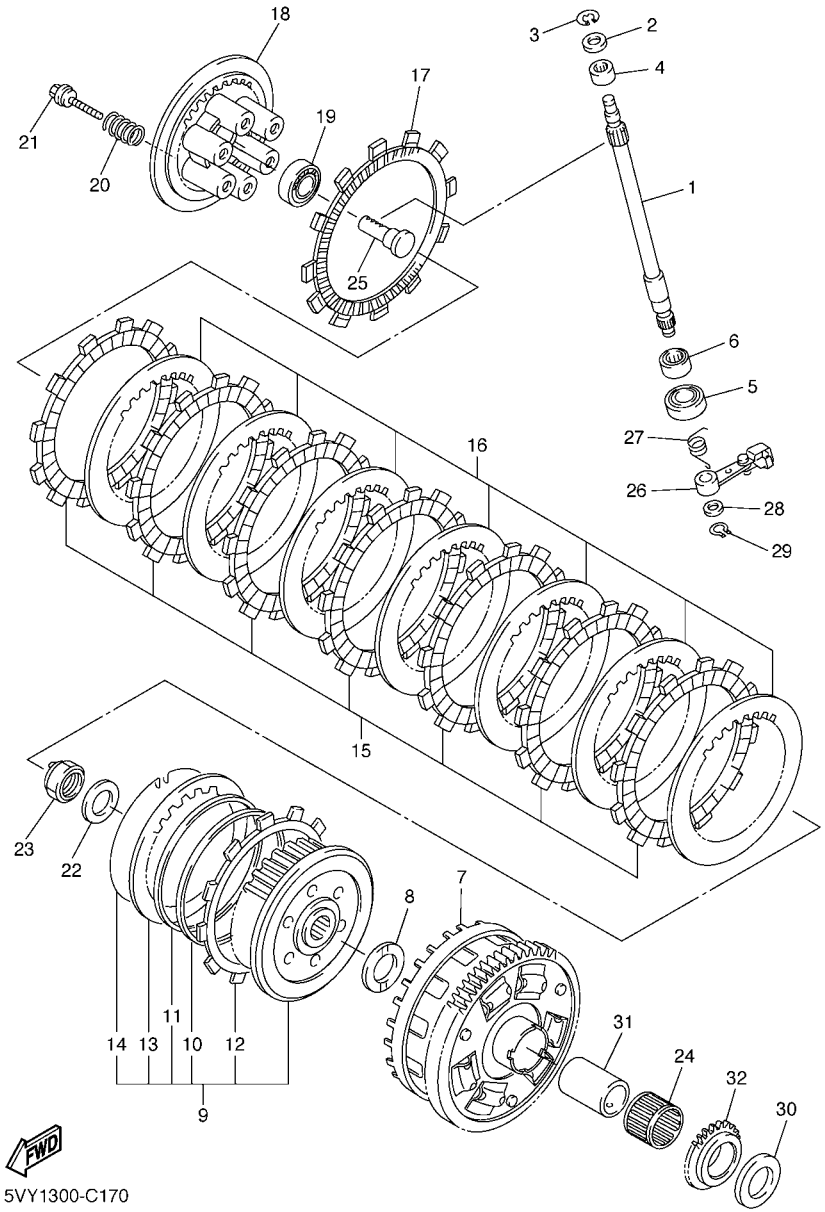

5VY1300-C170

FIG. 17 CLUTCH

REF. NO.	PART NO.	DESCRIPTION	5VY4	5VY5	5VY6			REMARKS
1	5VY–16382–00	AXLE, PUSH LEVER	1	1	1			
2	92907–08600	WASHER, PLATE	1	1	1			
3	99001–07600	CIRCLIP	1	1	1			
4	93317–11020	BEARING	1	1	1			
5	93102–15212	OIL SEAL	1	1	1			
6	93315–31502	BEARING	1	1	1			
7	5VY–16150–00	PRIMARY DRIVEN GEAR COMP.	1	1	1			
8	5VY–16154–00	PLATE, THRUST 1	1	1	1			
9	5VY–16370–00	CLUTCH BOSS ASSY	1	1	1			
10	5VY–16384–00	.PLATE, SEAT	1	1	1			
11	5VY–16383–00	.SPRING, CLUTCH BOSS	1	1	1			
12	5VY–16331–00	.PLATE, FRICTION 2	1	1	1			
13	5VY–16325–00	.PLATE, CLUTCH 2	1	1	1			
14	4X7–16385–00	.RING, CLUTCH BOSS	1	1	1			
15	5VY–16321–00	PLATE, FRICTION	7	7	7			
16	5VY–16325–00	PLATE, CLUTCH 2	7	7	7			
17	5VY–16330–00	PLATE, FRICTION 2	1	1	1			
18	5VY–16351–00	PLATE, PRESSURE 1	1	1	1			
19	93306–00304	BEARING (B6003C4)	1	1	1			
20	90501–230A0	SPRING, COMPRESSION	6	6	6			
21	90159–06009	SCREW, WITH WASHER	6	6	6			
22	90208–20001	WASHER, CONICAL SPRING	1	1	1			
23	90179–20007	NUT	1	1	1			
24	93310–232R9	BEARING	1	1	1			
25	4XV–16356–01	ROD, PUSH 1	1	1	1			
26	5VY–16340–00	PUSH LEVER ASSY	1	1	1			
27	90508–164B2	SPRING, TORSION	1	1	1			

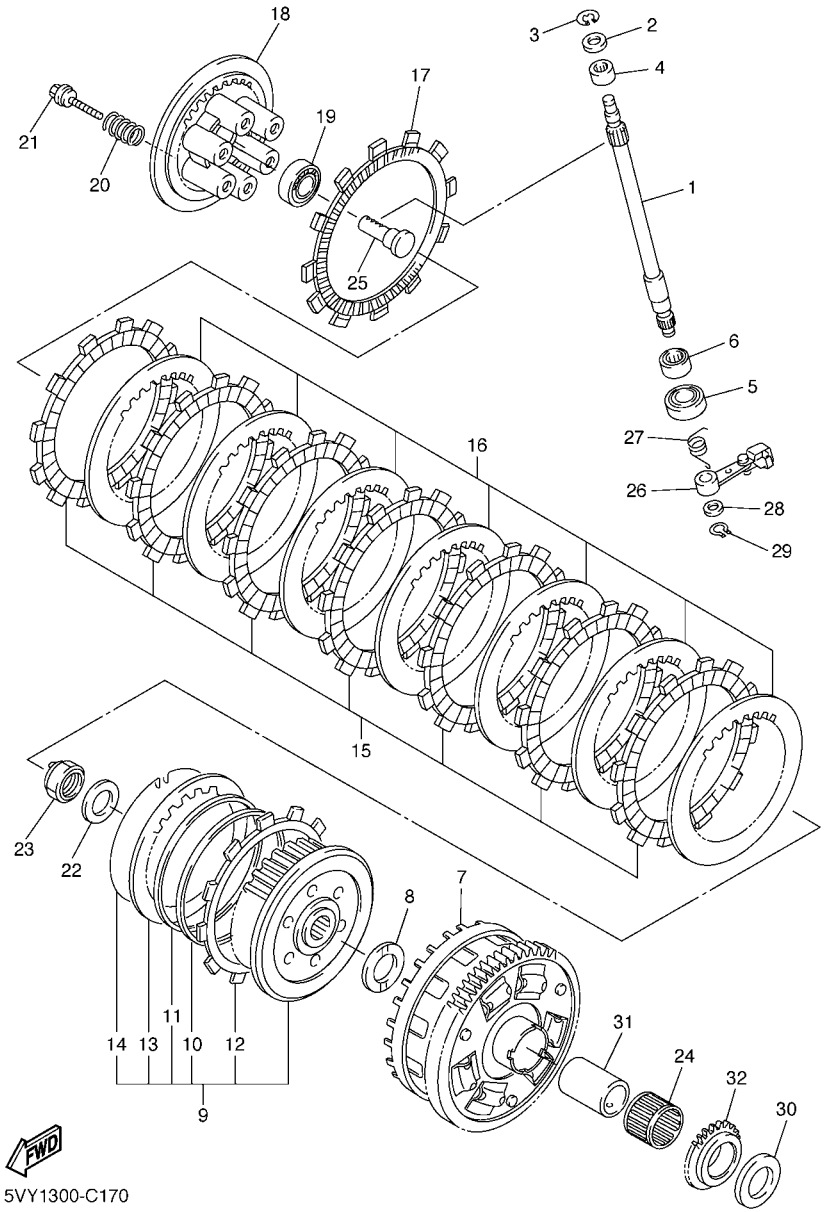

FIG. 17 CLUTCH

REF. NO.	PART NO.	DESCRIPTION	5VY4	5VY5	5VY6			REMARKS
28	90201–10029	WASHER, PLATE	1	1	1			
29	99009–10400	CIRCLIP	1	1	1			
30	5VY–16164–00	PLATE, THRUST 2	1	1	1			
31	5VY–16181–00	SPACER 1	1	1	1			
32	5VY–13354–00	SPROCKET, DRIVE	1	1	1			

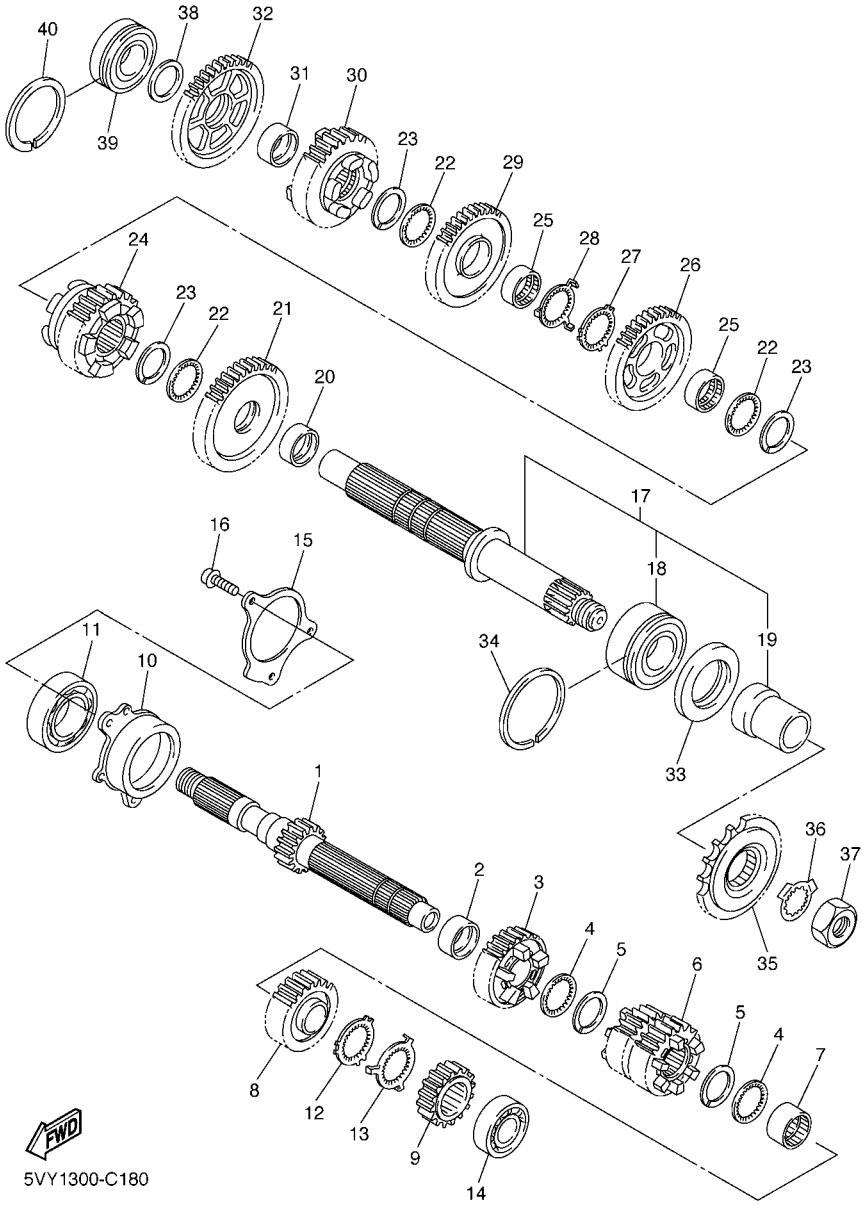

FIG. 18 TRANSMISSION

REF. NO.	PART NO.	DESCRIPTION	5VY4	5VY5	5VY6			REMARKS
1	5VY–17411–00	AXLE, MAIN (15T)	1	1	1			
2	90387–28003	COLLAR	1	1	1			
3	5VY–17151–00	GEAR, 5TH PINION (22T)	1	1	1			
4	90209–25011	WASHER	2	2	2			
5	93440–28184	CIRCLIP	2	2	2			
6	5VY–17131–00	GEAR, 3RD PINION (21/23T)	1	1	1			
7	90387–25007	COLLAR	1	1	1			
8	5VY–17161–00	GEAR, 6TH PINION (26T)	1	1	1			
9	5VY–17121–00	GEAR, 2ND PINION (16T)	1	1	1			
10	5VY–15163–00	HOUSING, BEARING 1	1	1	1			
11	93306–20652	BEARING	1	1	1			
12	90214–25004	WASHER, CLAW	1	1	1			
13	90214–25003	WASHER, CLAW	1	1	1			
14	93306–27208	BEARING	1	1	1			
15	5VY–17446–00	PLATE	1	1	1			
16	90110–06027	BOLT, HEXAGON SOCKET HEAD	3	3	3			
17	5VY–17402–00	DRIVE AXLE ASSY	1	1	1			
18	93305–20605	.BEARING	1	1	1			
19	5VY–17442–00	.COLLAR, DISTANCE	1	1	1			
20	90387–31003	COLLAR	1	1	1			
21	5VY–17221–10	GEAR, 2ND WHEEL (33T)	1	1	1			
22	90209–28008	WASHER	3	3	3			
23	93440–31187	CIRCLIP	3	3	3			
24	5VY–17261–10	GEAR, 6TH WHEEL (33T)	1	1	1			
25	90387–28004	COLLAR	2	2	2			
26	5VY–17241–00	GEAR, 4TH WHEEL (35T)	1	1	1			
27	90214–29002	WASHER, CLAW	1	1	1			

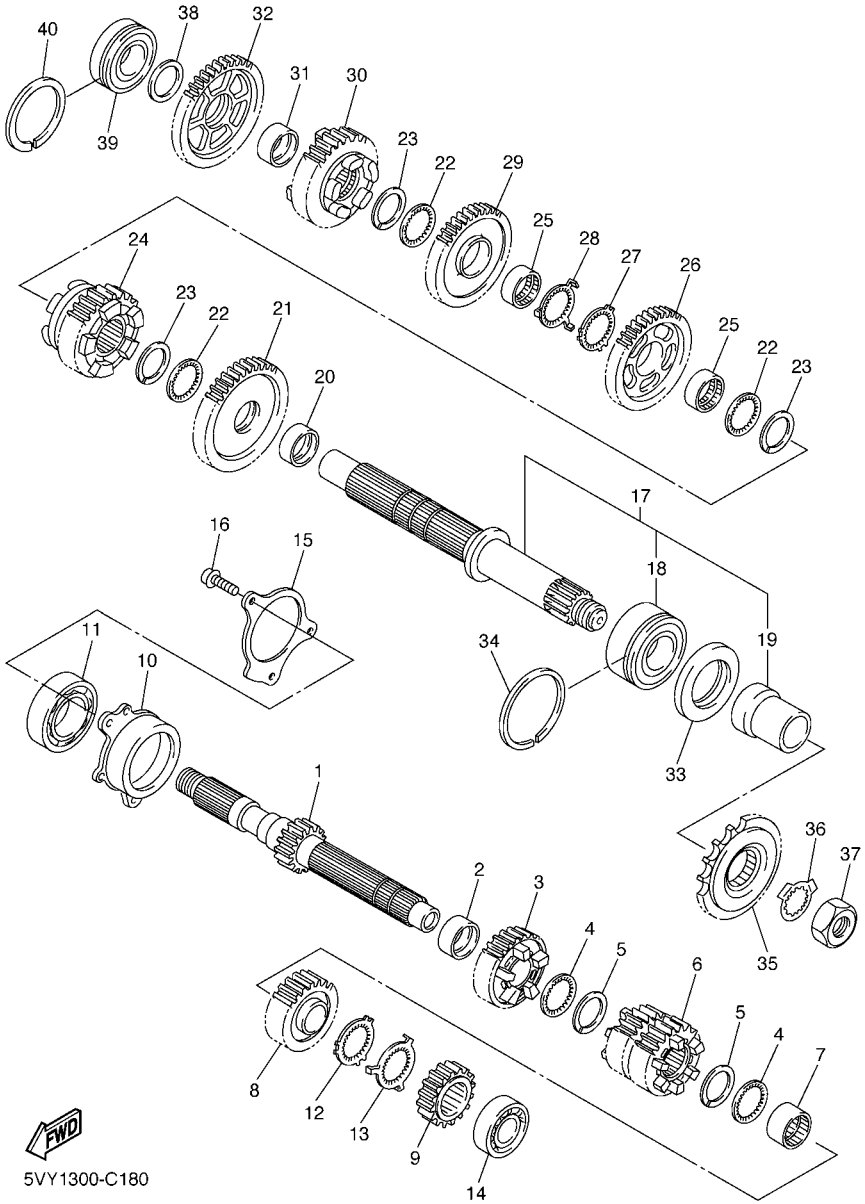

FIG. 18 TRANSMISSION

REF. NO.	PART NO.	DESCRIPTION	5VY4	5VY5	5VY6			REMARKS
28	90214–28002	WASHER, CLAW	1	1	1			
29	5VY–17231–00	GEAR, 3RD WHEEL (37T)	1	1	1			
30	5VY–17251–00	GEAR, 5TH WHEEL (30T)	1	1	1			
31	90387–25008	COLLAR	1	1	1			
32	5VY–17211–00	GEAR,1ST WHEEL (38T)	1	1	1			
33	93102–40330	OIL SEAL	1	1	1			
34	93440–62032	CIRCLIP	1	1	1			
35	3CV–17460–00	SPROCKET,DRIVE (17T)	1	1	1			
36	90215–30233	WASHER, LOCK	1	1	1			
37	90179–22003	NUT	1	1	1			
38	90201–257H0	WASHER, PLATE	1	1	1			
39	93306–205A2	BEARING	1	1	1			
40	93440–52009	CIRCLIP	1	1	1			

FIG. 19 SHIFT CAM & FORK

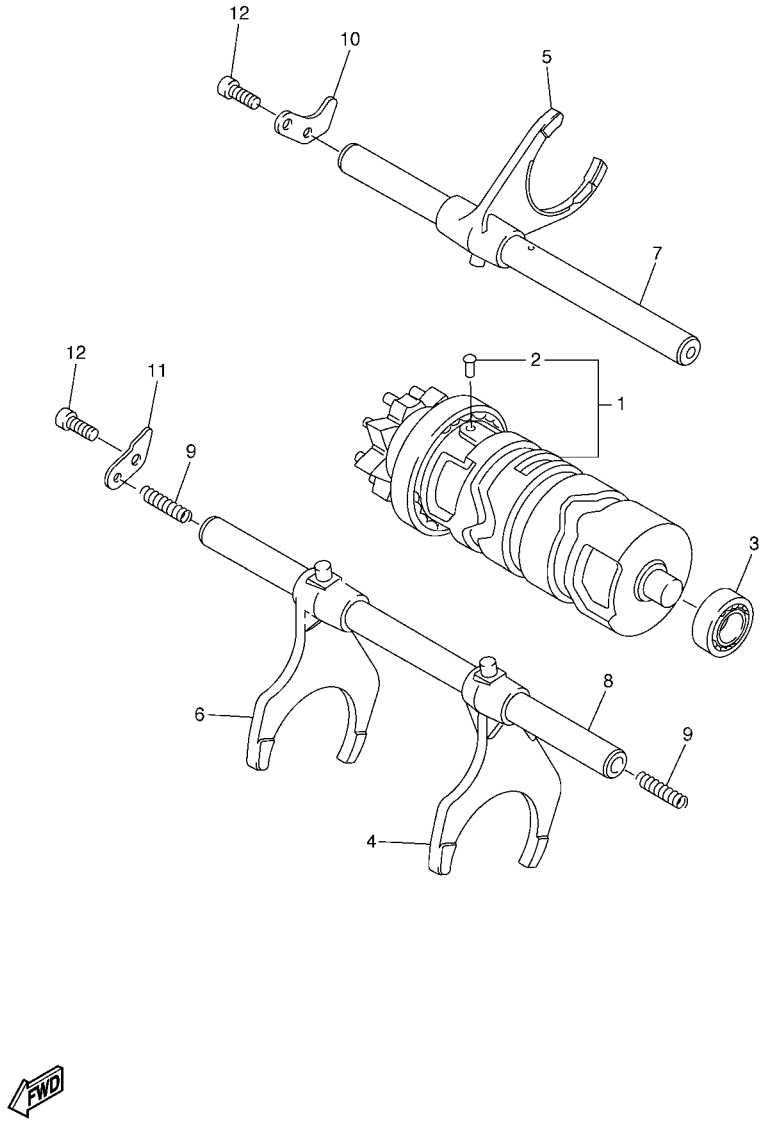

REF. NO.	PART NO.	DESCRIPTION	5VY4	5VY5	5VY6			REMARKS
1	5VY–18540–00	SHIFT CAM ASSY	1	1	1			
2	136–18542–00	.POINT, NEUTRAL	1	1	1			
3	93306–00106	BEARING	1	1	1			
4	5VY–18511–01	FORK, SHIFT 1	1	1	1			
5	5VY–18512–01	FORK, SHIFT 2	1	1	1			
6	5VY–18513–01	FORK, SHIFT 3	1	1	1			
7	5VY–18531–00	BAR, SHIFT FORK GUIDE 1	1	1	1			
8	5VY–18535–00	BAR, SHIFT FORK GUIDE 2	1	1	1			
9	90501–064L1	SPRING, COMPRESSION	2	2	2			
10	5VY–18536–00	STOPPER, SHIFT BAR	1	1	1			
11	5VY–18562–00	PLATE, STOPPER 2	1	1	1			
12	90110–06018	BOLT, HEXAGON SOCKET HEAD	2	2	2			

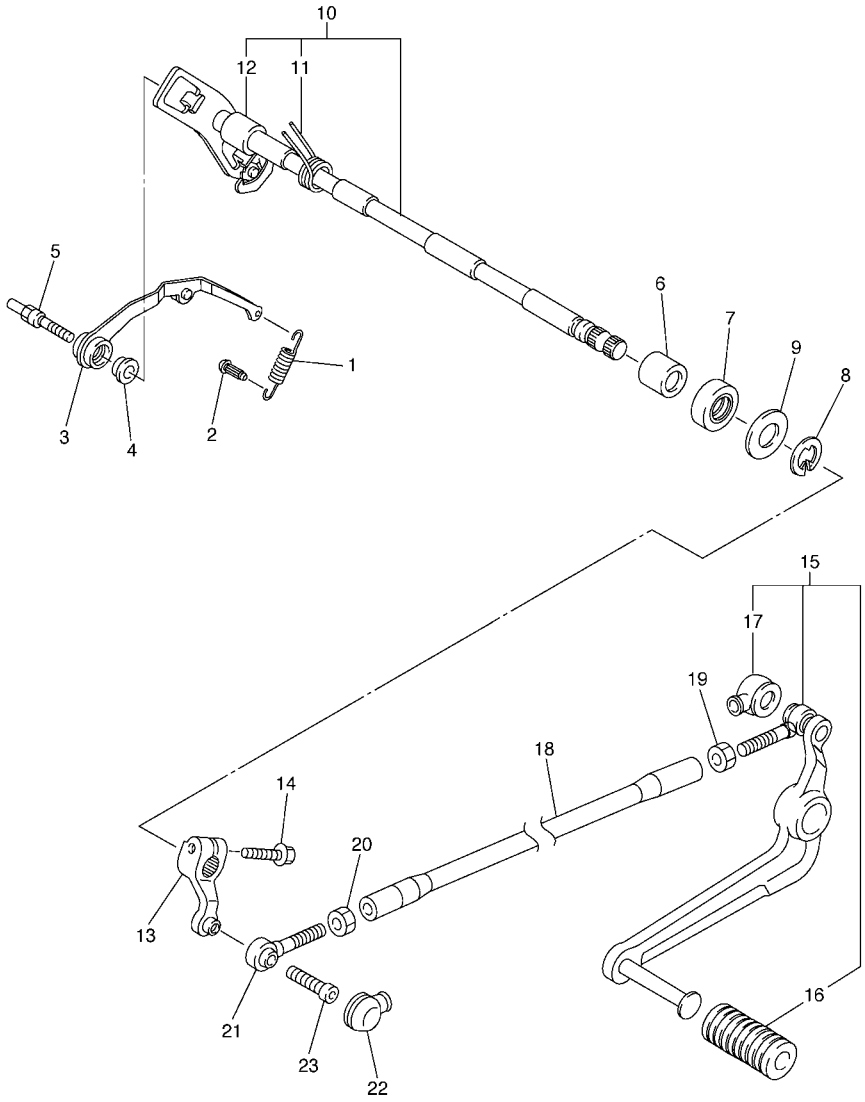

5VY1300-C200

FIG. 20 SHIFT SHAFT

REF. NO.	PART NO.	DESCRIPTION	5VY4	5VY5	5VY6			REMARKS
1	5VY–18144–00	HANGER, SPRING	1	1	1			
2	132–16346–00	HOOK, SPRING	1	1	1			
3	5VY–18140–00	STOPPER LEVER ASSY	1	1	1			
4	90387–0804S	COLLAR	1	1	1			
5	5VY–18127–00	STOPPER, SCREW	1	1	1			
6	93317–11287	BEARING	2	2	2			
7	93101–12004	OIL SEAL	1	1	1			
8	99001–10600	CIRCLIP	1	1	1			
9	90201–12575	WASHER, PLATE	2	2	2			
10	5VY–18101–00	SHIFT SHAFT ASSY	1	1	1			
11	90508–32020	.SPRING, TORSION	1	1	1			
12	90387–1211D	.COLLAR	1	1	1			
13	5VY–18112–00	ARM, SHIFT	1	1	1			
14	95027–06020	BOLT, FLANGE	1	1	1			
15	5VY–18110–00	SHIFT PEDAL ASSY	1	1	1			
16	5EB–18113–00	.COVER, SHIFT PEDAL	1	1	1			
17	4XV–18154–00	.COVER, DUST	1	1	1			
18	5VY–18115–00	ROD, SHIFT	1	1	1			
19	90170–06228	NUT(COUNTER CLOCKWISE)	1	1	1			
20	95304–06700	NUT	1	1	1			
21	5LV–18116–00	JOINT, ROD 1	1	1	1			
22	4XV–18154–00	COVER, DUST	1	1	1			
23	90111–06019	BOLT	1	1	1			

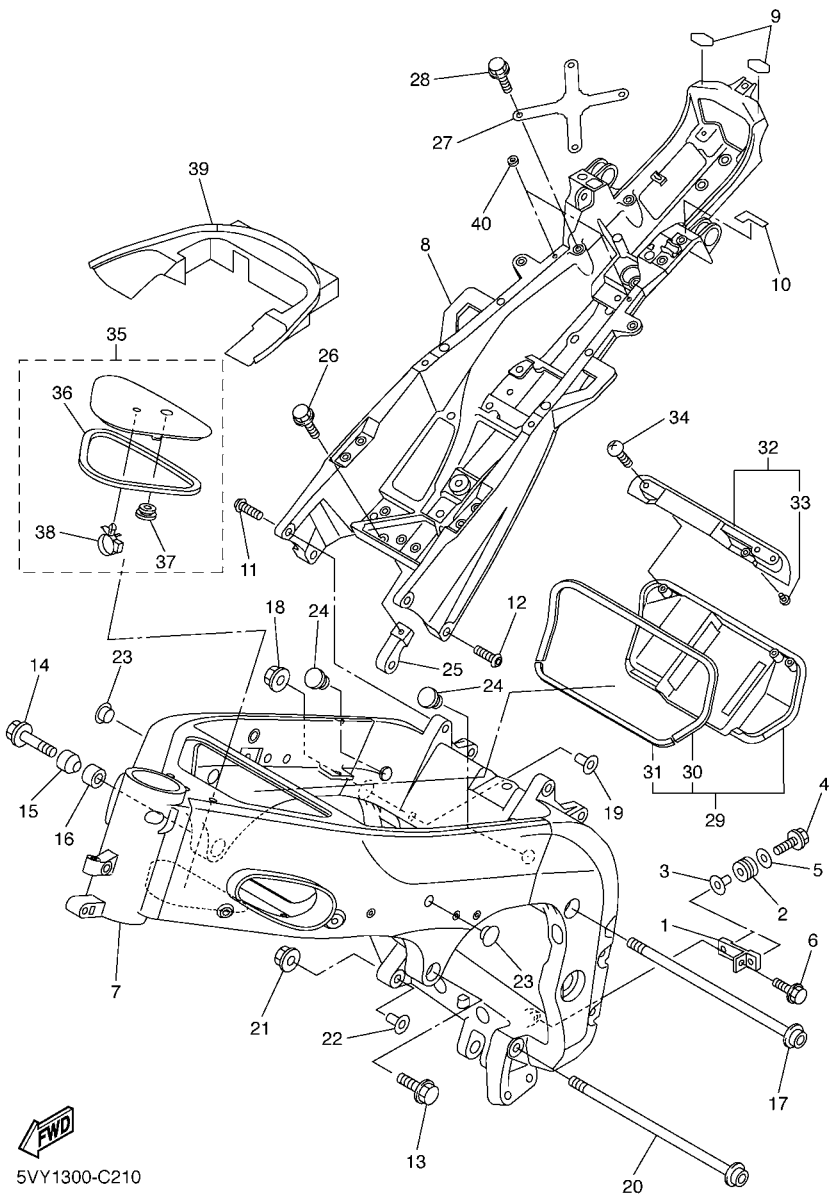

FIG. 21 FRAME

REF. NO.	PART NO.	DESCRIPTION	5VY4	5VY5	5VY6			REMARKS
1	5VY–2116J–00	BRACKET 7	1	1	1			
2	90480–14005	GROMMET	2	2	2			
3	90387–063E6	COLLAR	2	2	2			
4	95027–06020	BOLT, FLANGE	2	2	2			
5	90201–06M31	WASHER, PLATE	2	2	2			
6	95024–06012	BOLT, FLANGE	1	1	1			
7	5VY–21110–00	FRAME COMP.	1		1			
	5VY–21110–10	FRAME COMP.		1				
8	5VY–21190–00	REAR FRAME COMP.	1	1	1			
9	5VY–21268–00	SEAL	2	2	2			
10	5VY–21269–00	SEAL	1	1	1			
11	90149–10015	SCREW	2	2	2			
12	90149–10017	SCREW	2	2	2			
13	95024–10040	BOLT, FLANGE	1	1	1			
14	95024–10045	BOLT, FLANGE	1	1	1			
15	5VY–21414–00	BOSS, ENGINE MOUNT	1	1	1			
16	5VY–21424–00	BOSS, ENGINE MOUNT	1	1	1			
17	90110–10005	BOLT, HEXAGON SOCKET HEAD	1	1	1			
18	90179–10696	NUT	1	1	1			
19	5EB–21495–00	BOLT, ENGINE ADJUSTING	1	1	1			
20	90110–10005	BOLT, HEXAGON SOCKET HEAD	1	1	1			
21	90179–10696	NUT	1	1	1			
22	5EB–21495–00	BOLT, ENGINE ADJUSTING	1	1	1			
23	90338–15004	PLUG	2	2	2			
24	90338–23004	PLUG	2	2	2			
25	5VY–21435–00	BRACKET, MUFFLER 1	1	1	1			
26	90109–06056	BOLT	1	1	1			

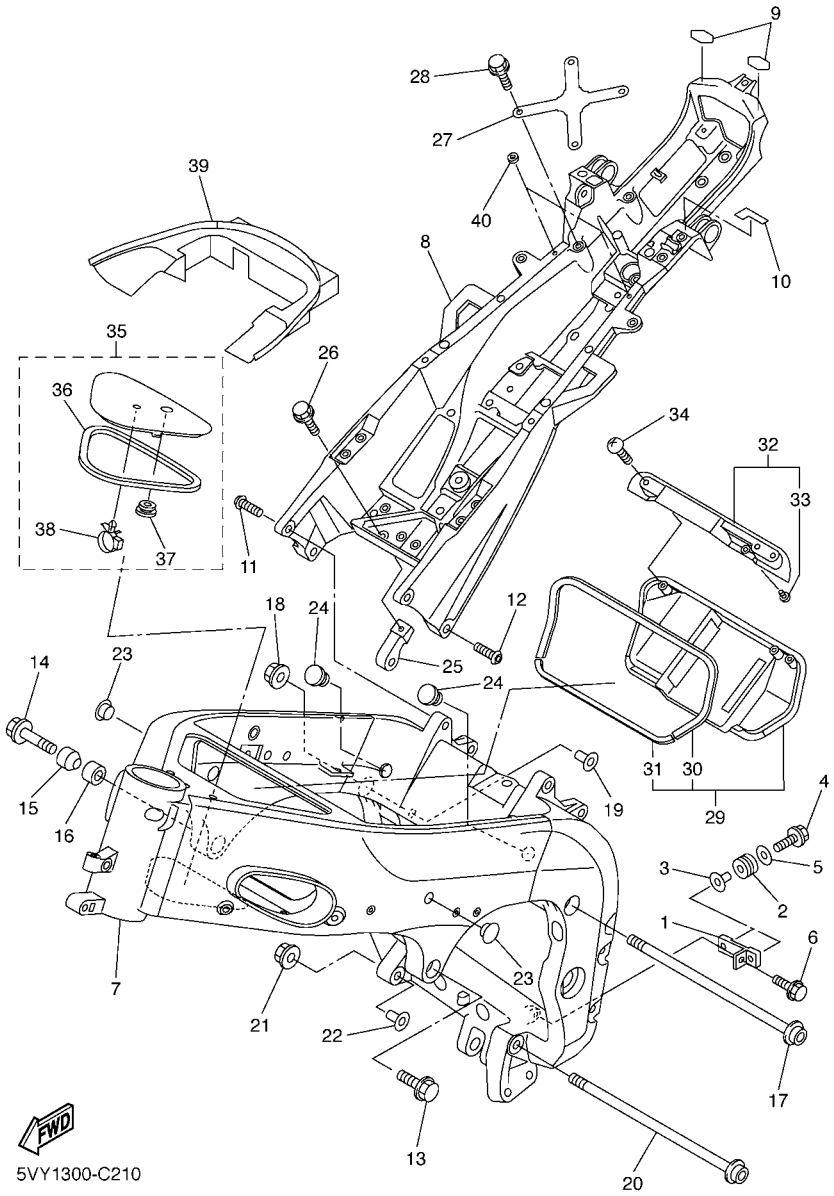

FIG. 21 FRAME

REF. NO.	PART NO.	DESCRIPTION	5VY4	5VY5	5VY6			REMARKS
27	5VY–21131–00	BRACKET	1	1	1			
28	95827–06016	BOLT, FLANGE	4	4	4			
29	5VY–2110M–00	COVER ASSY	1	1	1			
30	5VY–2174X–00	.DAMPER	1	1	1			
31	5VY–21746–00	.DAMPER	1	1	1			
32	5VY–2131P–00	COVER PLATE COMP.	1	1	1			
33	90338–06018	.PLUG	1	1	1			
34	90167–05080	SCREW, TAPPING	3	3	3			
35	5VY–2110M–10	COVER ASSY	1	1	1			
36	5VY–2174Y–00	.DAMPER	1	1	1			
37	90480–01333	.GROMMET	1	1	1			
38	90464–16006	.CLAMP	1	1	1			
39	5VY–2117R–00	COVER 4	1	1	1			
40	5SL–84753–00	DAMPER	2	2	2			

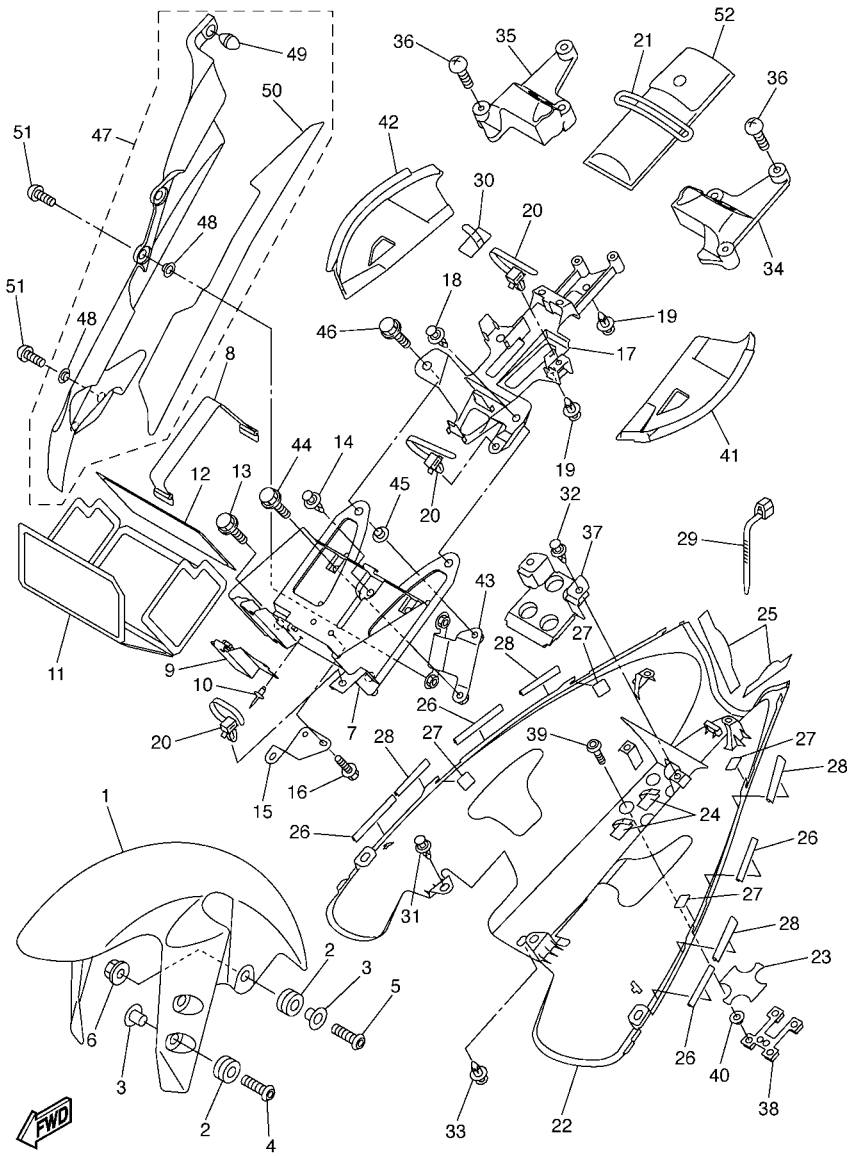

FIG. 22 FENDER

REF. NO.	PART NO.	DESCRIPTION	5VY4	5VY5	5VY6			REMARKS
1	5PW–21511–00–P3	FENDER, FRONT	1	1	1			UR DRMK
	5PW–21511–00–P1	FENDER, FRONT	1	1	1			UR DPBMC
	5PW–21511–00–P5	FENDER, FRONT	1	1	1			UR BS4
2	90480–12072	GROMMET	6	6	6			
3	90387–065J6	COLLAR	6	6	6			
4	90111–06043	BOLT	4	4	4			
5	90111–06030	BOLT	2	2	2			
6	95707–06500	NUT, FLANGE	2	2	2			
7	5VY–8212B–00	BOX, BATTERY 1	1	1	1			
8	133–82131–00	BAND, BATTERY	1	1	1			
9	5VY–21617–00	BRACKET, FENDER	1	1	1			
10	90267–32161	RIVET, BLIND	4	4	4			
11	5VY–82122–00	SEAT, BATTERY	1	1	1			
12	5VY–82123–00	SEAT, BATTERY	1	1	1			
13	90109–06043	BOLT	2	2	2			
14	90269–07076	RIVET	1	1	1			
15	5VY–2164G–00	STAY 2	1	1	1			
16	95827–06016	BOLT, FLANGE	2	2	2			
17	5VY–8212C–00	BOX, BATTERY 2	1	1	1			
18	90269–07076	RIVET	1	1	1			
19	90269–07077	RIVET	3	3	3			
20	90464–12036	CLAMP	3	3	3			
21	4XV–21376–00	BAND, TOOL	1	1	1			
22	5VY–21611–00–P0	FENDER, REAR	1	1	1			UR DRMK
	5VY–21611–00–P1	FENDER, REAR	1	1	1			UR DPBMC
	5VY–21611–00–P3	FENDER, REAR	1	1	1			UR BS4
23	5VY–21669–00	SEAL	1	1	1			

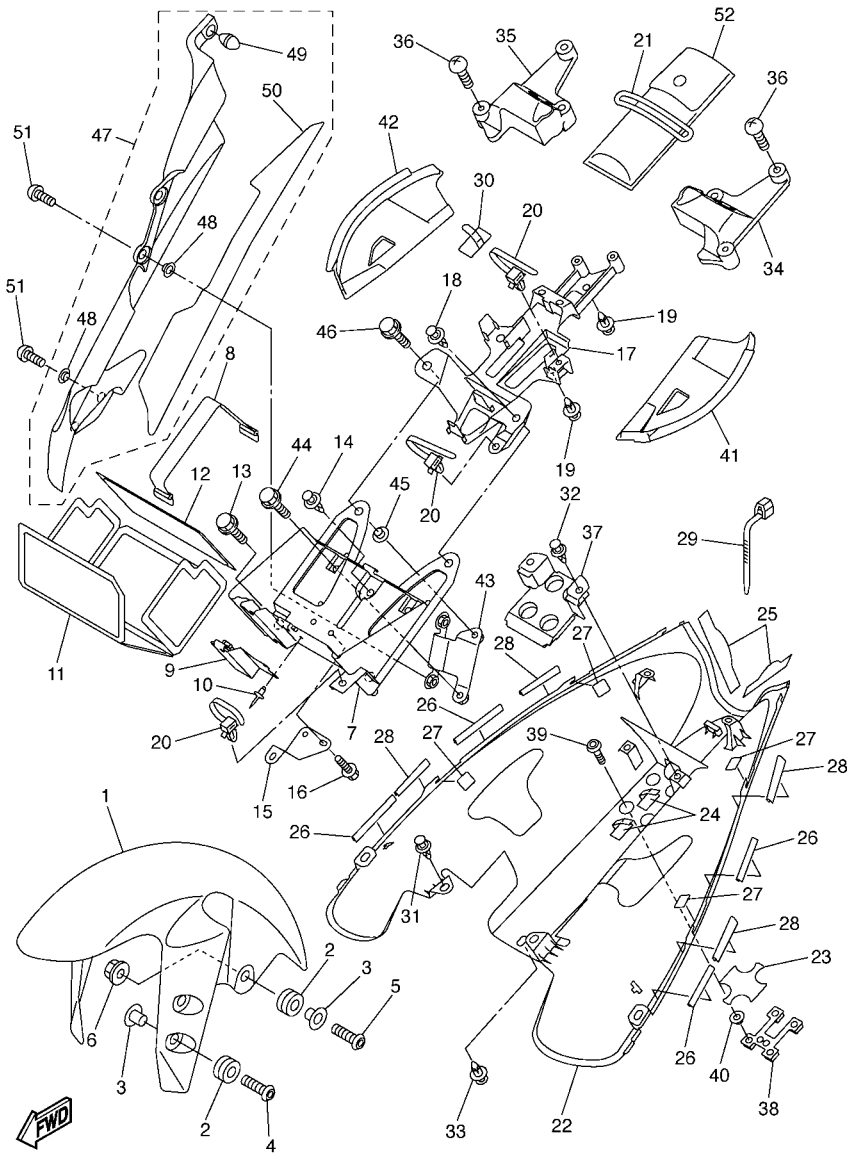

FIG. 22 FENDER

REF. NO.	PART NO.	DESCRIPTION	5VY4	5VY5	5VY6			REMARKS
24	90465–04020	CLAMP	2	2	2			
25	5VY–21639–00	DAMPER 2	2	2	2			
26	5PW–21732–00	SEAL 1	4	4	4			
27	1UF–15379–00	SEAL, CRANKCASE	4	4	4			
28	5VY–21732–00	SEAL 1	4	4	4			
29	90464–13073	CLAMP	2	2	2			
30	90465–04020	CLAMP	1	1	1			
31	90269–06081	RIVET	2	2	2			
32	90269–06081	RIVET	2	2	2			
33	90269–07077	RIVET	1	1	1			
34	5VY–2163A–00	COVER, REAR FENDER 1	1	1	1			
35	5VY–2163E–00	COVER, REAR FENDER 2	1	1	1			
36	97707–50014	SCREW, TAPPING	6	6	6			
37	5VY–21652–00	PROTECTOR	1	1	1			
38	5VY–2161G–00	BRACKET 6	1	1	1			
39	90111–06030	BOLT	4	4	4			
40	90387–06071	COLLAR	4	4	4			
41	5VY–2164K–00	PATCH 5	1	1	1			
42	5VY–2164L–00	PATCH 6	1	1	1			
43	5VY–2164F–00	STAY 1	1	1	1			
44	90119–05011	BOLT, WITH WASHER	1	1	1			
45	90387–05017	COLLAR	1	1	1			
46	90119–05193	BOLT, WITH WASHER	1	1	1			
47	5VY–27490–00	PROTECTOR ASSY	1	1	1			
48	90387–0603J	.COLLAR	4	4	4			
49	5VY–14757–00	.DAMPER, MUFFLER 2	1	1	1			
50	5VY–2838G–00	.SEAT 1	1	1	1			

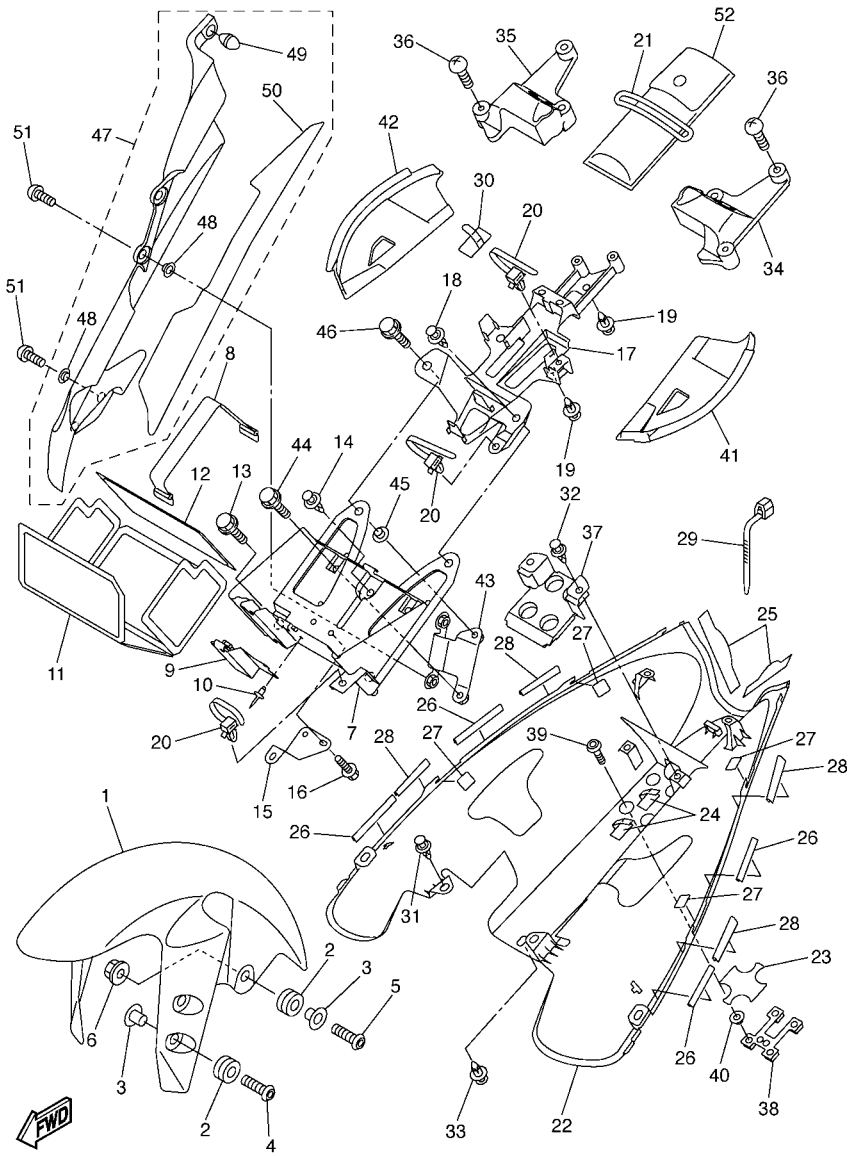

5VY1300-C220

FIG. 22 FENDER

REF. NO.	PART NO.	DESCRIPTION	5VY4	5VY5	5VY6			REMARKS
51	90149–06298	SCREW	4	4	4			
52	5VY–28100–00	TOOL KIT	1	1	1			

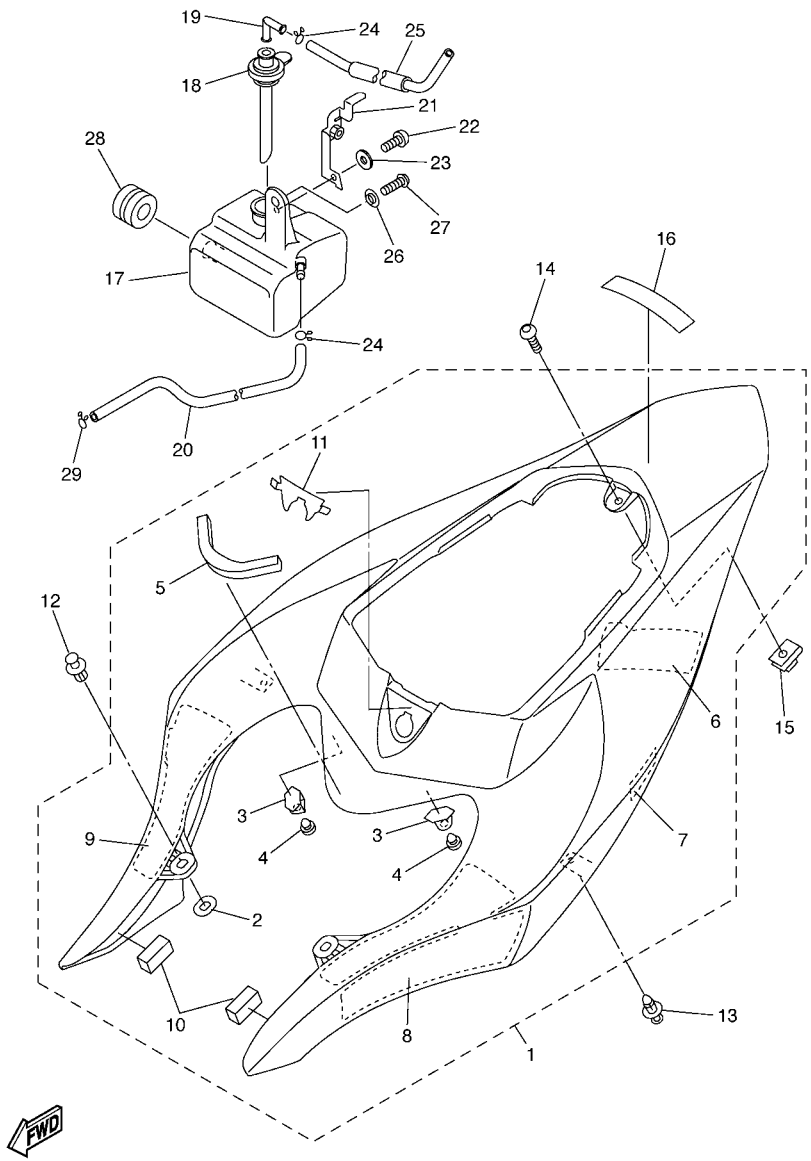

FIG. 23 SIDE COVER

REF. NO.	PART NO.	DESCRIPTION	5VY4	5VY5	5VY6			REMARKS
1	5VY–21710–00–P0	SIDE COVER ASSY 1	1	1	1			UR DRMK
	5VY–21710–00–P1	SIDE COVER ASSY 1	1	1	1			UR DPBMC
	5VY–21710–00–P3	SIDE COVER ASSY 1	1	1	1			UR BS4
2	5PW–2174X–00	.DAMPER	2	2	2			
3	5VY–2172E–00	.STAY, SIDE COVER 1	2	2	2			
4	90338–06018	.PLUG	2	2	2			
5	5VY–21747–00	.DAMPER	1	1	1			
6	1JK–21735–00	.SEAL 2	1	1	1			
7	5PW–21732–00	.SEAL 1	1	1	1			
8	5VY–2172P–00	.SEAT, 1	1	1	1			
9	5VY–2173P–00	.SEAT, 2	1	1	1			
10	1UJ–21717–00	.DAMPER	2	2	2			
11	5VY–21735–00	.SEAL 2	1	1	1			
12	90269–07076	RIVET	2	2	2			
13	90269–06011	RIVET	2	2	2			
14	90111–05007	BOLT	1	1	1			
15	90183–05076	NUT, SPRING	1	1	1			
16	99244–00080	EMBLEM, YAMAHA	1	1	1			UR FOR DRMK
	99241–00080	EMBLEM, YAMAHA	1	1	1			UR FOR DPBMC
	99246–00080	EMBLEM, YAMAHA	1	1	1			UR FOR BS4
17	5VY–21871–00	TANK, RECOVERY	1	1	1			
18	5VY–21875–00	CAP	1	1	1			
19	26H–21828–00	ELBOW	1	1	1			
20	90445–08022	HOSE	1	1	1			
21	5VY–21843–00	STAY, 4	1	1	1			
22	98504–06010	SCREW, PAN HEAD	1	1	1			
23	92903–06600	WASHER, PLATE	1	1	1			

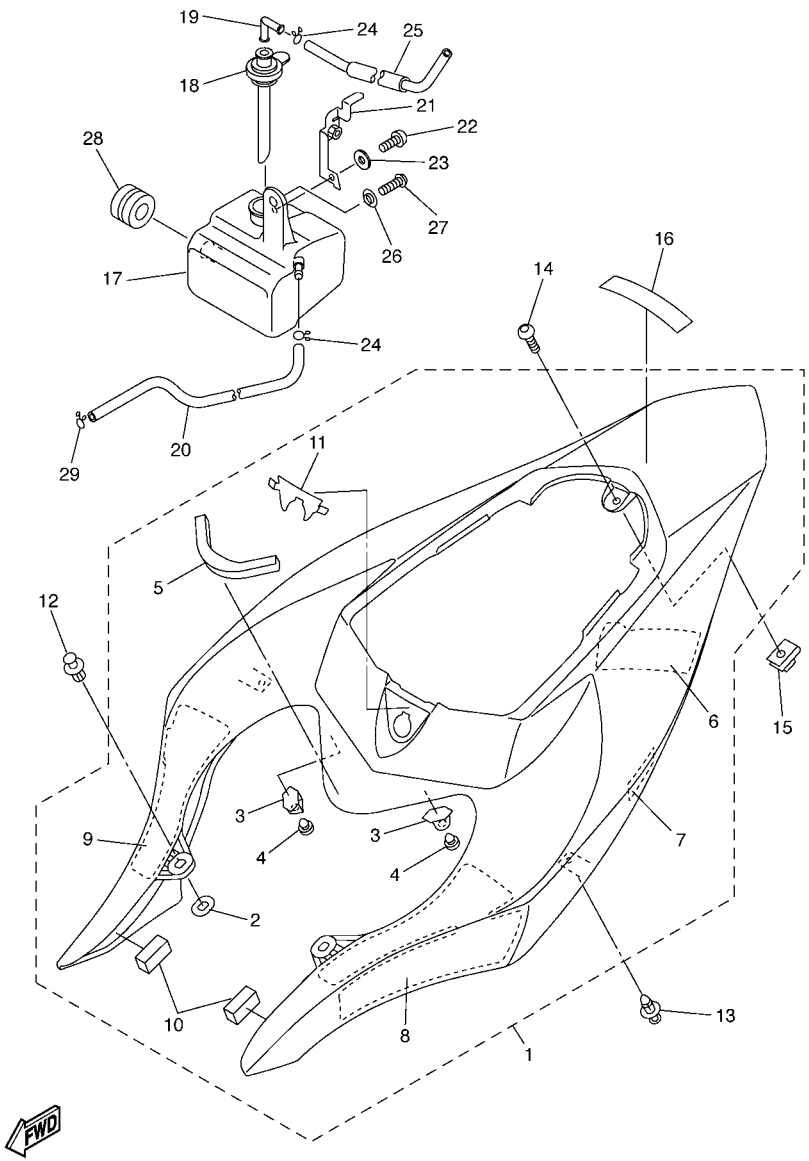

5VY1300-C230

FIG. 23 SIDE COVER

REF. NO.	PART NO.	DESCRIPTION	5VY4	5VY5	5VY6			REMARKS
24	90467–08075	CLIP	2	2	2			
25	90445–087K6	HOSE (L700)	1	1	1			
26	90387–062M9	COLLAR	1	1	1			
27	92017–06012	BOLT, BUTTON HEAD	1	1	1			
28	90480–20001	GROMMET	1	1	1			
29	90467–08075	CLIP	1	1	1			

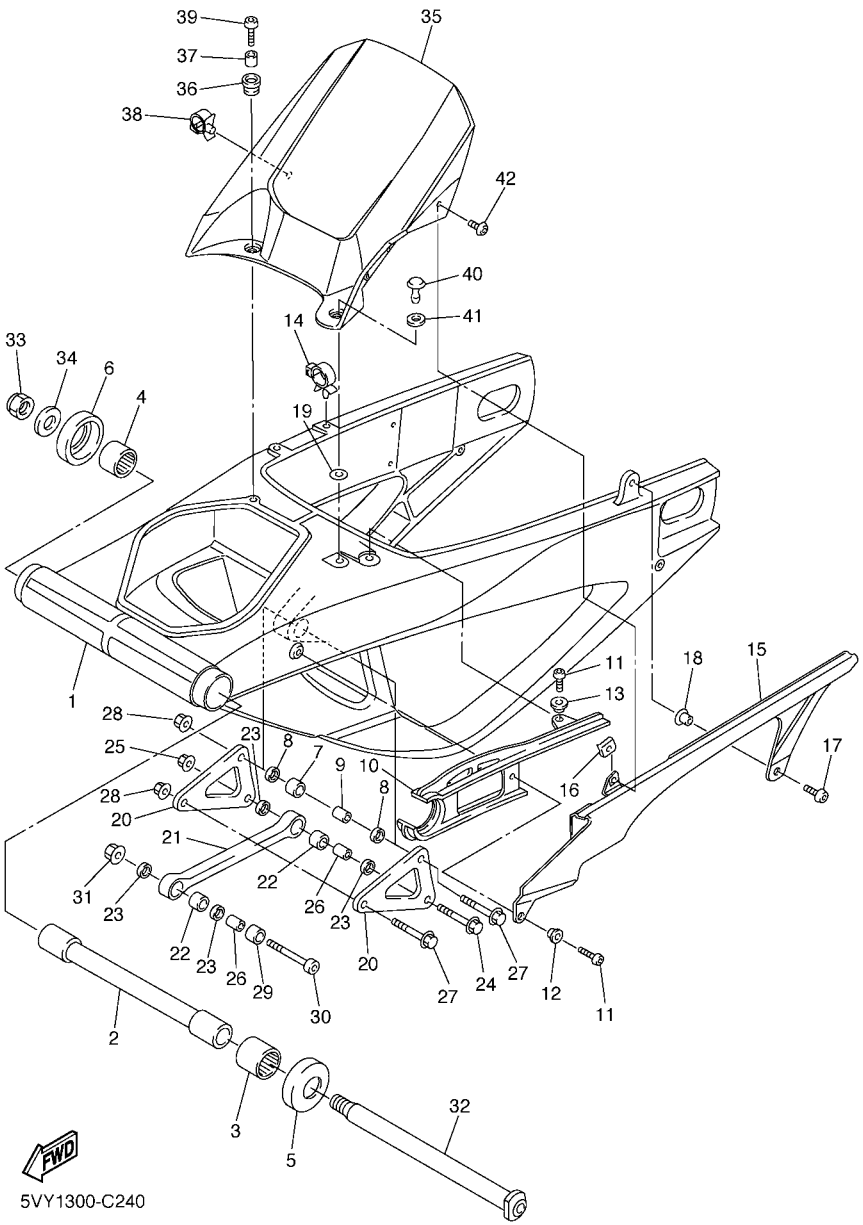

FIG. 24 REAR ARM

REF. NO.	PART NO.	DESCRIPTION	5VY4	5VY5	5VY6			REMARKS
1	5VY–22110–00	REAR ARM COMP.	1	1	1			
2	5VY–22184–00	BUSH	1	1	1			
3	93317–52865	BEARING	1	1	1			
4	93317–428U8	BEARING	1	1	1			
5	5VY–22128–00	COVER, THRUST 1	1	1	1			
6	5VY–22128–10	COVER, THRUST 1	1	1	1			
7	93315–31758	BEARING	1	1	1			
8	93109–17071	OIL SEAL	2	2	2			
9	90387–1012A	COLLAR	1	1	1			
10	5VY–22151–00	SEAL, GUARD	1	1	1			
11	92017–06016	BOLT, BUTTON HEAD	2	2	2			
12	90387–062X0	COLLAR	1	1	1			
13	90387–06066	COLLAR	1	1	1			
14	90464–16011	CLAMP	1	1	1			
15	5VY–22311–00	CASE, CHAIN	1	1	1			
16	90183–05076	NUT, SPRING	1	1	1			
17	90149–06298	SCREW	1	1	1			
18	90387–07717	COLLAR	1	1	1			
19	5VY–22873–00	SEAL 1	1	1	1			
20	5VY–2217A–00	ARM, RELAY	2	2	2			
21	5VY–2217M–00	ARM 1	1	1	1			
22	93315–31758	BEARING	2	2	2			
23	93109–17071	OIL SEAL	4	4	4			
24	90105–10017	BOLT, FLANGE	1	1	1			
25	95607–10200	NUT, U FLANGE	1	1	1			
26	90387–1012A	COLLAR	2	2	2			
27	90105–10017	BOLT, FLANGE	2	2	2			

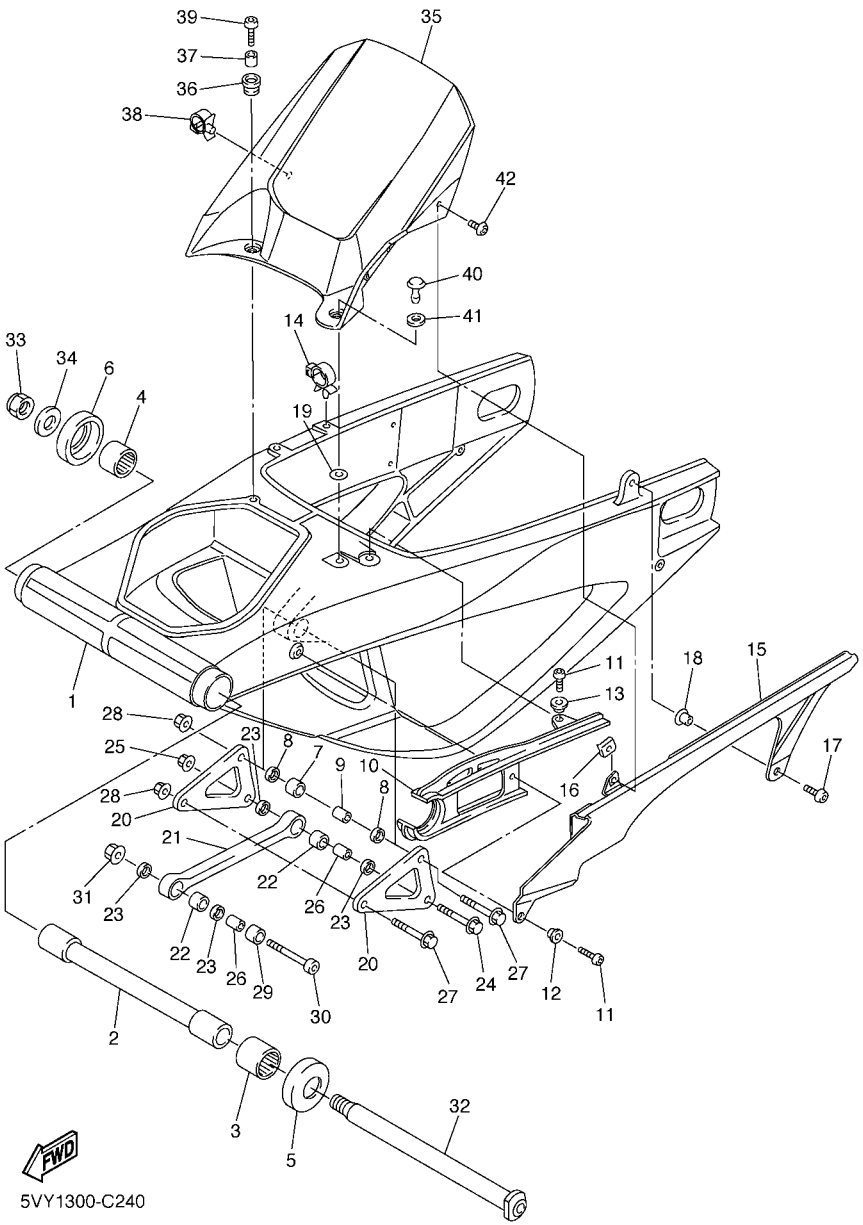

FIG. 24 REAR ARM

REF. NO.	PART NO.	DESCRIPTION	5VY4	5VY5	5VY6			REMARKS
28	95607–10200	NUT, U FLANGE	2	2	2			
29	90387–1013U	COLLAR	1	1	1			
30	90110–10011	BOLT, HEXAGON SOCKET HEAD	1	1	1			
31	95607–10200	NUT, U FLANGE	1	1	1			
32	5VY–22141–00	SHAFT, PIVOT	1	1	1			
33	90185–18167	NUT, SELF-LOCKING	1	1	1			
34	90201–18013	WASHER, PLATE	1	1	1			
35	5VY–21650–00	REAR FENDER COMP.	1	1	1			
36	90480–12005	GROMMET	2	2	2			
37	90387–06057	COLLAR	2	2	2			
38	90464–16012	CLAMP	1	1	1			
39	90149–06302	SCREW	2	2	2			
40	90269–08002	RIVET	1	1	1			
41	5PW–28372–00	DAMPER	1	1	1			
42	90111–05003	BOLT	1	1	1			

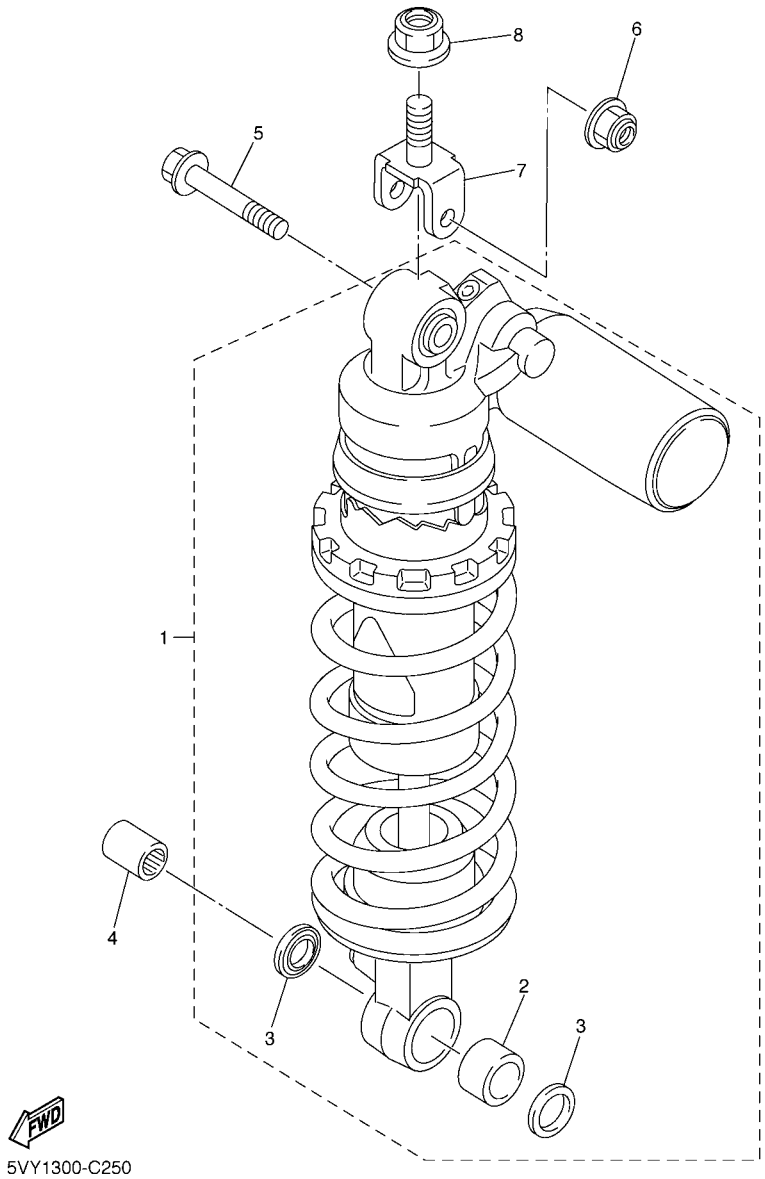

FIG. 25 REAR SUSPENSION

REF. NO.	PART NO.	DESCRIPTION	5VY4	5VY5	5VY6			REMARKS
1	5VY–22210–10	SHOCK ABSORBER ASSY, REAR	1	1				
	5VY–22210–20	SHOCK ABSORBER ASSY, REAR			1			
2	93315–31758	.BEARING	1	1	1			
3	93109–17071	.OIL SEAL	2	2	2			
4	90387–1012A	COLLAR	1	1	1			
5	90105–10017	BOLT, FLANGE	1	1	1			
6	95607–10200	NUT, U FLANGE	1	1	1			
7	5SL–22219–00	BRACKET, UPPER	1	1	1			
8	95607–14200	NUT, SELF-LOCKING	1	1	1			

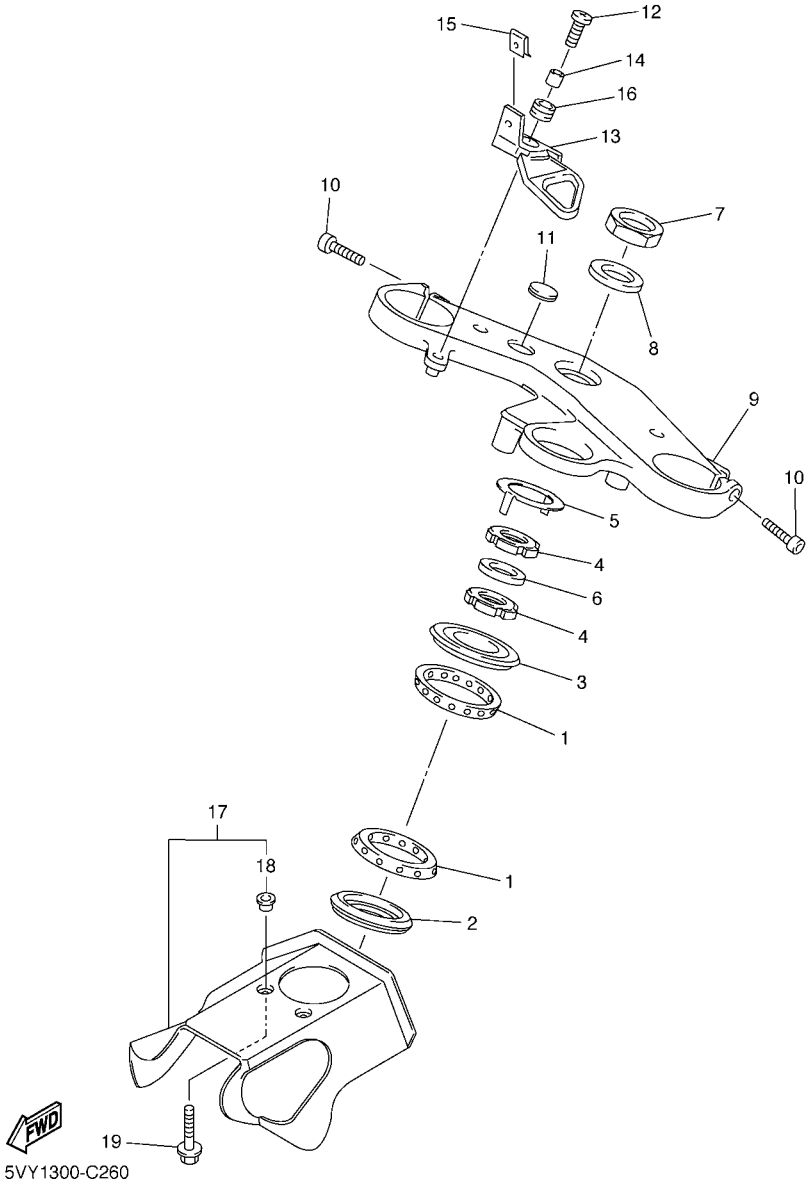

FIG. 26 STEERING

REF. NO.	PART NO.	DESCRIPTION	5VY4	5VY5	5VY6			REMARKS
1	93399–99932	BEARING	2	2	2			
2	3FV–23462–00	SEAL, STEERING	1	1	1			
3	4XV–23415–01	COVER, BALL RACE 1	1	1	1			
4	90179–30691	NUT	2	2	2			
5	4XV–23418–00	WASHER, SPECIAL	1	1	1			
6	90202–30235	WASHER, PLATE	1	1	1			
7	90170–28419	NUT	1	1	1			
8	90201–281U8	WASHER, PLATE	1	1	1			
9	5VY–23435–10	CROWN, HANDLE	1	1	1			
10	91314–08030	BOLT	2	2	2			
11	4XV–2341B–00	EMBLEM	1	1	1			
12	90111–06041	BOLT	1	1	1			
13	5VY–26292–00	STAY	1	1	1			
14	90387–06057	COLLAR	1	1	1			
15	90183–050A0	NUT, SPRING	1	1	1			
16	90480–14003	GROMMET	1	1	1			
17	5VY–23808–00	STRG, COVER. ASSY	1	1	1			
18	90387–0611K	.COLLAR	2	2	2			
19	90109–065G4	BOLT	2	2	2			

FIG. 27 FRONT FORK

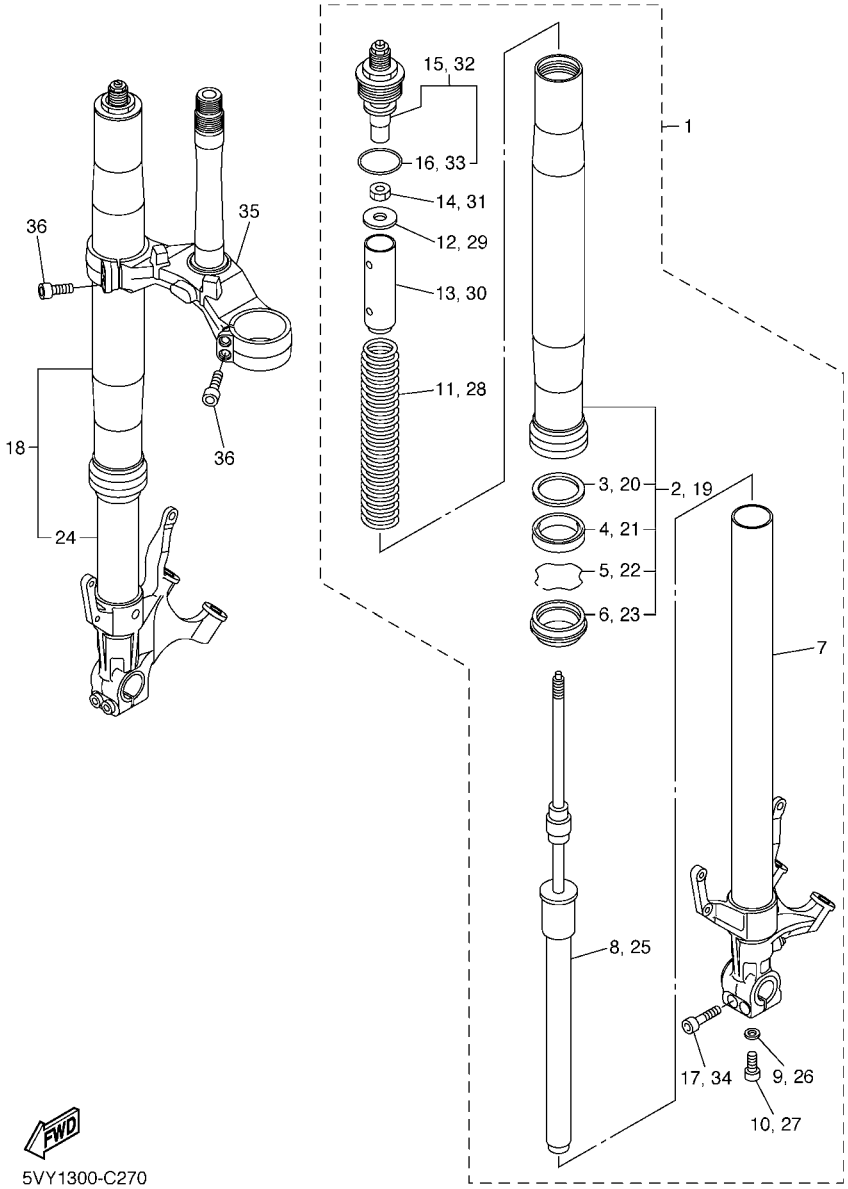

REF. NO.	PART NO.	DESCRIPTION	5VY4	5VY5	5VY6			REMARKS
1	5VY–23102–10	FRONT FORK ASSY (L.H)	1	1	1			
2	5VY–23136–10	.TUBE, OUTER	1	1	1			
3	5PW–23146–00	..WASHER, OIL SEAL	1	1	1			
4	4PU–23145–01	..OIL SEAL	1	1	1			
5	4V4–23153–L0	..RING, SNAP	1	1	1			
6	4PU–23144–00	..SEAL, DUST	1	1	1			
7	5VY–23110–00	.INNER TUBE COMP.1	1	1	1			
8	5VY–23170–00	.CYLINDER COMP., FRONT FORK	1	1	1			
9	509–23158–L0	.GASKET	1	1	1			
10	5UX–23181–00	.BOLT, HEXAGON SOCKET HEAD	1	1	1			
11	5VY–23141–00	.SPRING, FRONT FORK	1	1	1			
12	5VY–12277–00	.WASHER	1	1	1			
13	5VY–23118–00	.SPACER	1	1	1			
14	3LC–23357–00	.NUT	1	1	1			
15	5VY–23111–00	.BOLT, CAP	1	1	1			
16	3XJ–23147–L0	..O-RING	1	1	1			
17	91314–08040	.BOLT	2	2	2			
18	5VY–23103–10	FRONT FORK ASSY (R.H)	1	1	1			
19	5VY–23136–10	.TUBE, OUTER	1	1	1			
20	5PW–23146–00	..WASHER, OIL SEAL	1	1	1			
21	4PU–23145–01	..OIL SEAL	1	1	1			
22	4V4–23153–L0	..RING, SNAP	1	1	1			
23	4PU–23144–00	..SEAL, DUST	1	1	1			
24	5VY–23120–00	.INNER TUBE COMP.2	1	1	1			
25	5VY–23170–00	.CYLINDER COMP., FRONT FORK	1	1	1			
26	509–23158–L0	.GASKET	1	1	1			
27	5UX–23181–00	.BOLT, HEXAGON SOCKET HEAD	1	1	1			

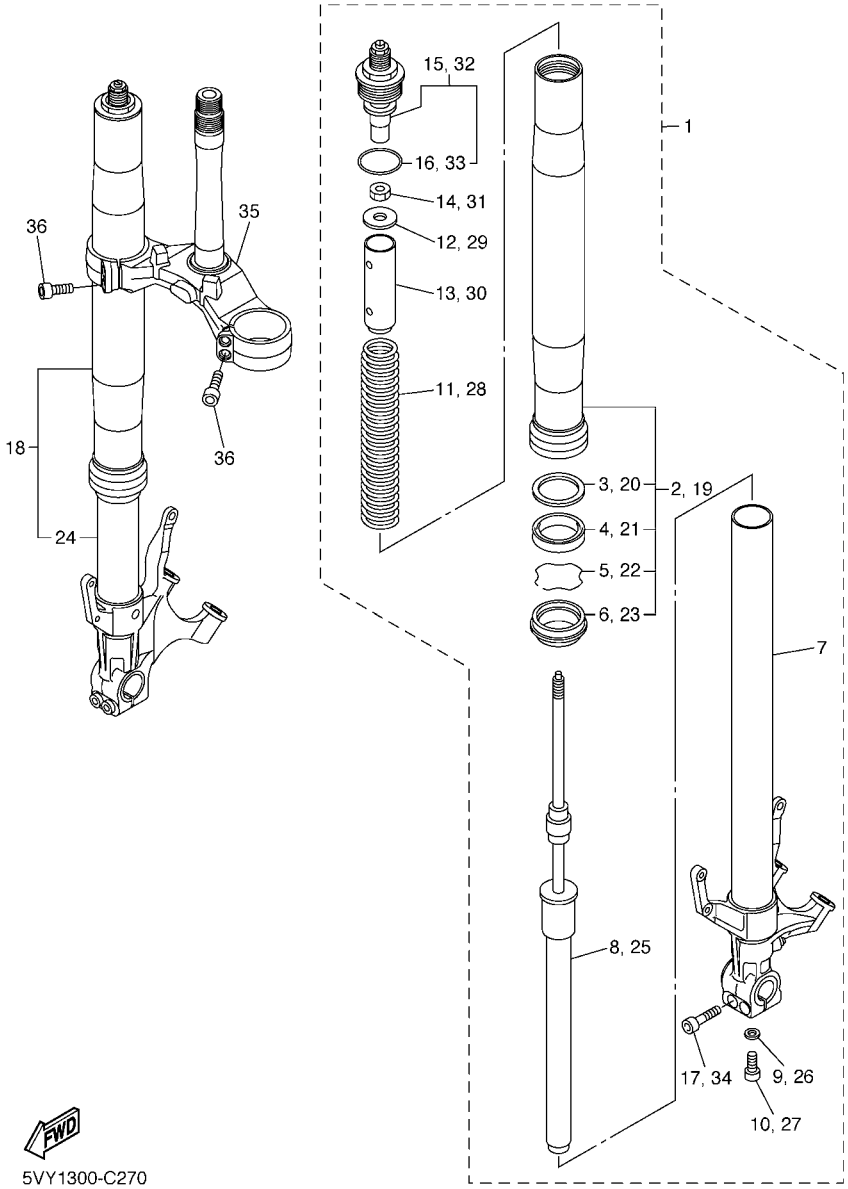

FIG. 27 FRONT FORK

REF. NO.	PART NO.	DESCRIPTION	5VY4	5VY5	5VY6			REMARKS
28	5VY–23141–00	.SPRING, FRONT FORK	1	1	1			
29	5VY–12277–00	.WASHER	1	1	1			
30	5VY–23118–00	.SPACER	1	1	1			
31	3LC–23357–00	.NUT	1	1	1			
32	5VY–23111–00	.BOLT, CAP	1	1	1			
33	3XJ–23147–L0	..O-RING	1	1	1			
34	91314–08040	.BOLT	2	2	2			
35	5VY–23340–00	UNDER BRACKET COMP.	1	1	1			
36	91314–08030	BOLT	4	4	4			

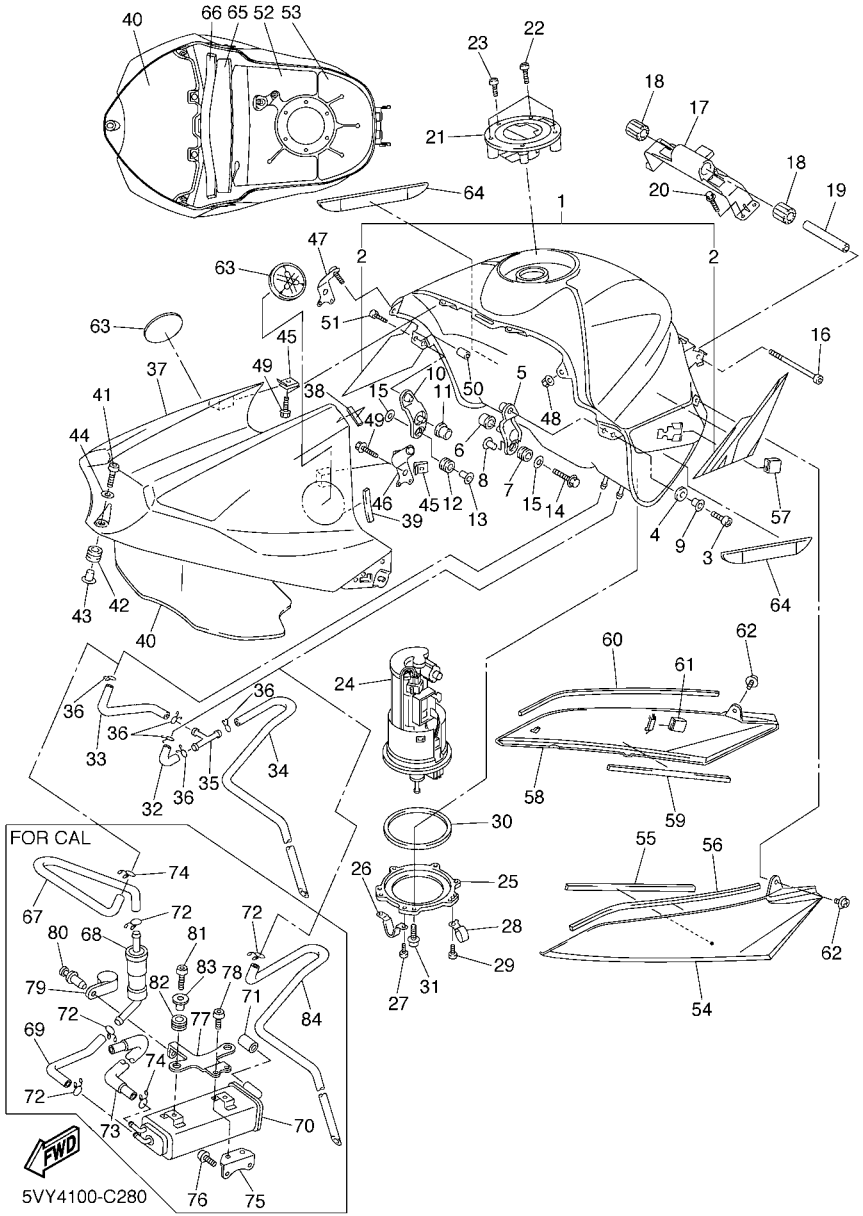

FIG. 28 FUEL TANK

REF. NO.	PART NO.	DESCRIPTION	5VY4	5VY5	5VY6			REMARKS
1	5VY–YK241–30–P0	FUEL TANK COMP.	1	1	1			UR DRMK
	5VY–Y2410–30–01	FUEL TANK COMP.	1	1	1			UR DPBMC
	5VY–YK241–M0–P1	FUEL TANK COMP.	1	1	1			UR S3 FOR BS4
2	5VY–24240–00	.GRAPHIC SET	1	1	1			FOR DPBMC
3	91317–06016	BOLT	2	2	2			
4	5VY–24183–00	DAMPER, LOCATING 3	2	2	2			
5	5VY–24191–00	BRACKET, FUEL TANK 1	1	1	1			
6	5VY–24181–00	DAMPER, LOCATING 1	1	1	1			
7	90480–10542	GROMMET	1	1	1			
8	90387–066Y6	COLLAR	1	1	1			
9	90387–061U9	COLLAR	2	2	2			
10	5VY–24192–00	BRACKET, FUEL TANK 2	1	1	1			
11	5VY–24181–00	DAMPER, LOCATING 1	1	1	1			
12	90480–10542	GROMMET	1	1	1			
13	90387–066Y6	COLLAR	1	1	1			
14	95027–06030	BOLT, FLANGE	2	2	2			
15	90201–06063	WASHER, PLATE	2	2	2			
16	91317–06090	BOLT	1	1	1			
17	5VY–2413Y–00	BRACKET, TANK FITTING	1	1	1			
18	5SL–24183–00	DAMPER, LOCATING 3	2	2	2			
19	90387–06055	COLLAR	1	1	1			
20	95027–06020	BOLT, FLANGE	4	4	4			
21	5JJ–24602–00	CAP ASSY	1	1	1			
22	90110–05112	BOLT, HEXAGON SOCKET HEAD	3	3	3			
23	91317–05010	BOLT	1	1	1			
24	5PW–13907–01	FUEL PUMP COMP.	1	1	1			
25	5VY–24491–00	BRACKET, FUEL PUMP	1	1	1			

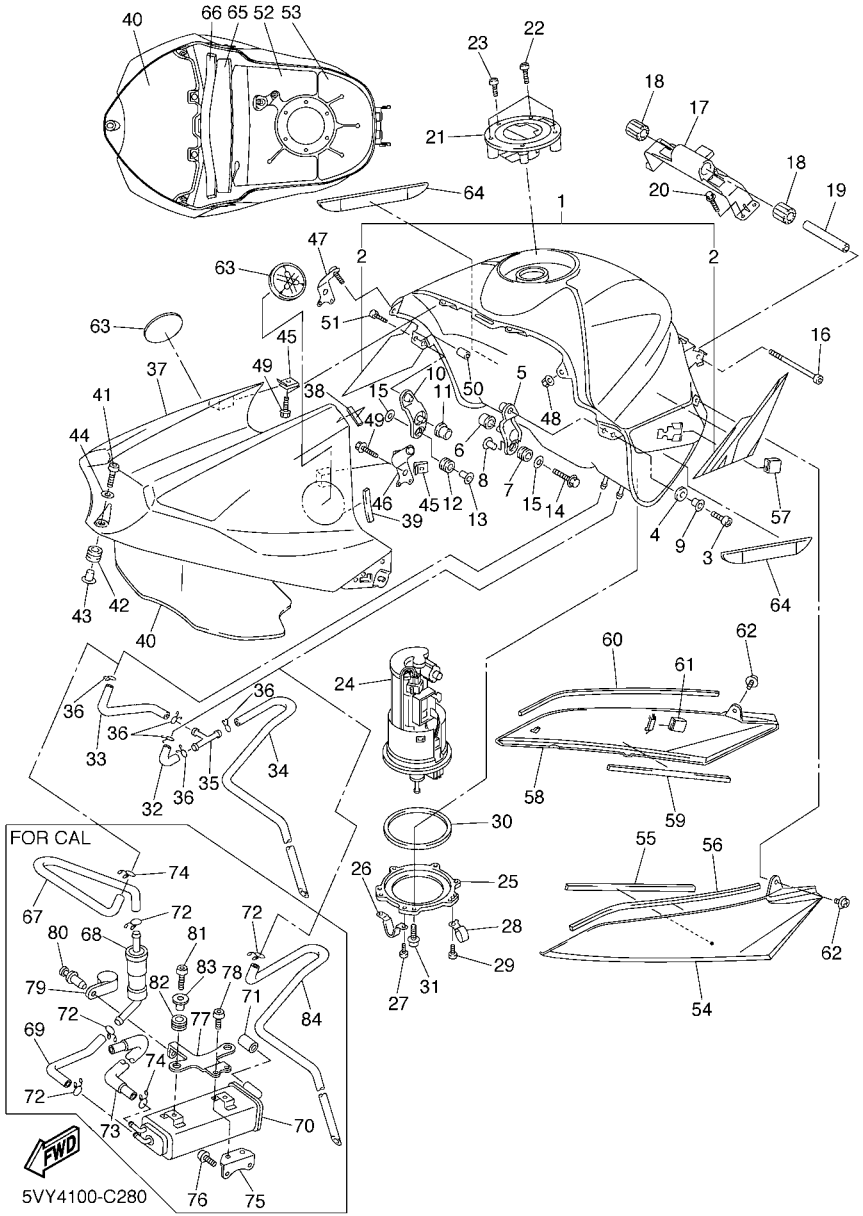

FIG. 28 FUEL TANK

REF. NO.	PART NO.	DESCRIPTION	5VY4	5VY5	5VY6			REMARKS
26	5PW–24192–00	BRACKET, FUEL TANK 2	1	1	1			
27	98907–05008	SCREW, BIND	2	2	2			
28	90461–10010	CLAMP	1	1	1			
29	90154–05012	SCREW, BINDING	1	1	1			
30	5JW–24486–00	O-RING	1	1	1			
31	90110–05014	BOLT, HEXAGON SOCKET HEAD	6	6	6			
32	5VY–24315–00	PIPE 5	1		1			
33	5VY–24316–00	PIPE 6	1		1			
34	5VY–24317–00	PIPE 7	1		1			
35	90413–07007	WAY 3	1		1			
36	90467–09006	CLIP	5		5			
37	5VY–2171A–00–P0	COVER, TOP	1	1	1			UR DRMK
	5VY–2171A–00–P1	COVER, TOP	1	1	1			UR DPBMC
	5VY–2171A–00–P3	COVER, TOP	1	1	1			UR BS4
38	5VY–2414J–00	DAMPER, PLATE 2	2	2	2			
39	4XV–2834E–00	DAMPER 1	2	2	2			
40	5VY–24145–00	DAMPER, SIDE COVER	1	1	1			
41	91314–06025	BOLT	1	1	1			
42	90480–12314	GROMMET	1	1	1			
43	90387–065J6	COLLAR	1	1	1			
44	90201–06M30	WASHER, PLATE	1	1	1			
45	90183–05074	NUT, SPRING	4	4	4			
46	5VY–24117–00	STAY, FUEL TANK 3	1	1	1			
47	5VY–24118–00	STAY, FUEL TANK 4	1	1	1			
48	95707–05500	NUT, FLANGE	2	2	2			
49	90105–05002	BOLT, FLANGE	4	4	4			
50	90179–05523	NUT	2	2	2			

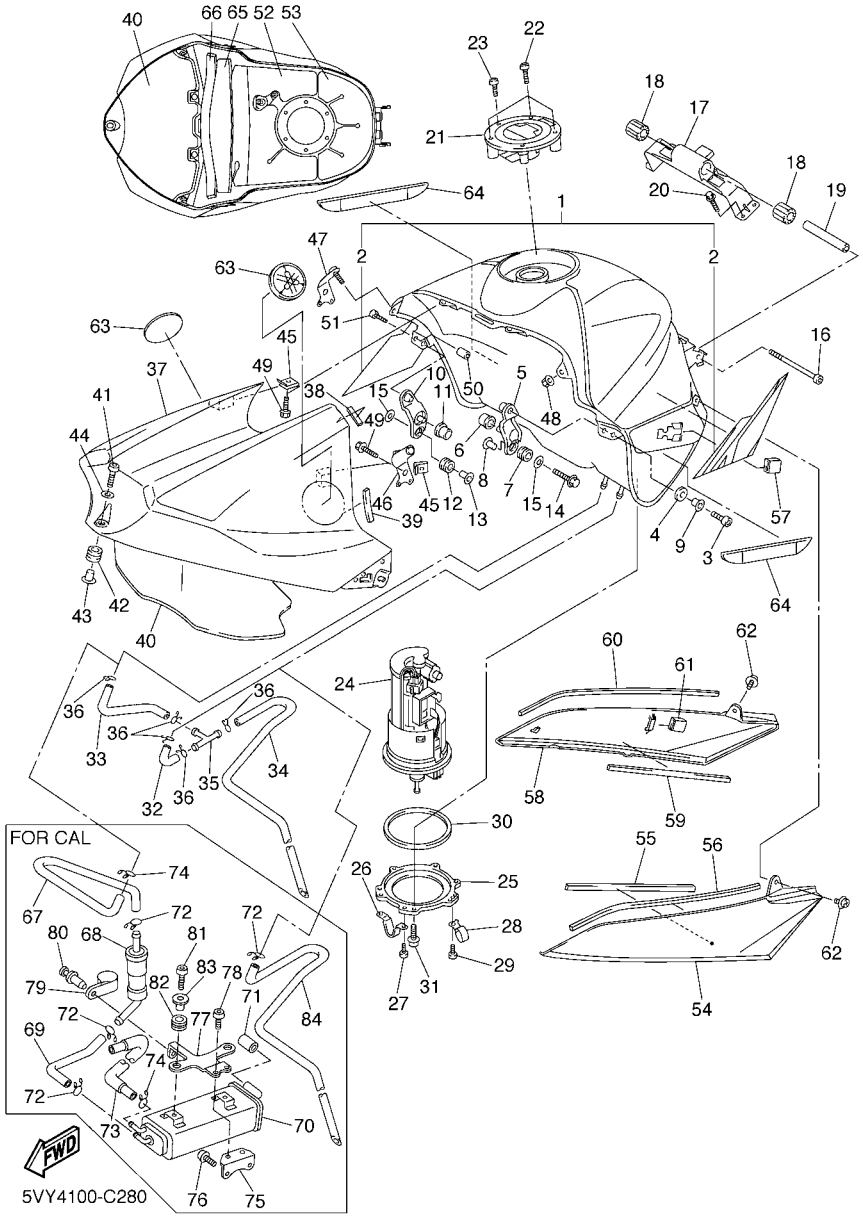

FIG. 28 FUEL TANK

REF. NO.	PART NO.	DESCRIPTION	5VY4	5VY5	5VY6			REMARKS
51	98907–05014	SCREW, BIND	2	2	2			
52	5VY–2414N–00	DAMPER, PLATE 4	1	1	1			
53	5VY–2414P–00	DAMPER, PLATE 5	1	1	1			
54	5VY–24129–00	COVER, SIDE 1	1	1	1			
55	5PW–2414J–00	DAMPER, PLATE 2	1	1	1			
56	5PW–2414H–00	DAMPER, PLATE 1	1	1	1			
57	5PW–2411J–01	DAMPER, SIDE COVER	1	1	1			
58	5VY–24139–00	COVER, SIDE 2	1	1	1			
59	5PW–2414J–00	DAMPER, PLATE 2	1	1	1			
60	5PW–2414H–00	DAMPER, PLATE 1	1	1	1			
61	5PW–2411J–01	DAMPER, SIDE COVER	1	1	1			
62	90159–05015	SCREW, WITH WASHER	2	2	2			
63	5PW–2413B–00	EMBLEM	2	2	2			
64	5VY–2414K–00	DAMPER, PLATE 3	2	2	2			
65	5VY–2414R–00	DAMPER, PLATE 6	1	1	1			
66	5VY–2414H–00	DAMPER, PLATE 1	1	1	1			
67	5VY–24313–00	PIPE 3		1				
68	5RB–24180–00	ROLL OVER VALVE ASSY		1				
69	5VY–24314–00	PIPE 4		1				
70	5VY–24170–00	CANISTER ASSY		1				
71	90445–11418	HOSE (L18)		1				
72	90467–09006	CLIP		4				
73	5VY–1443J–00	PIPE		1				
74	90467–09006	CLIP		2				
75	5VY–2419F–00	BRACKET, CANISTOR		1				
76	92017–06016	BOLT, BUTTON HEAD		2				
77	5VY–24216–00	STAY		1				

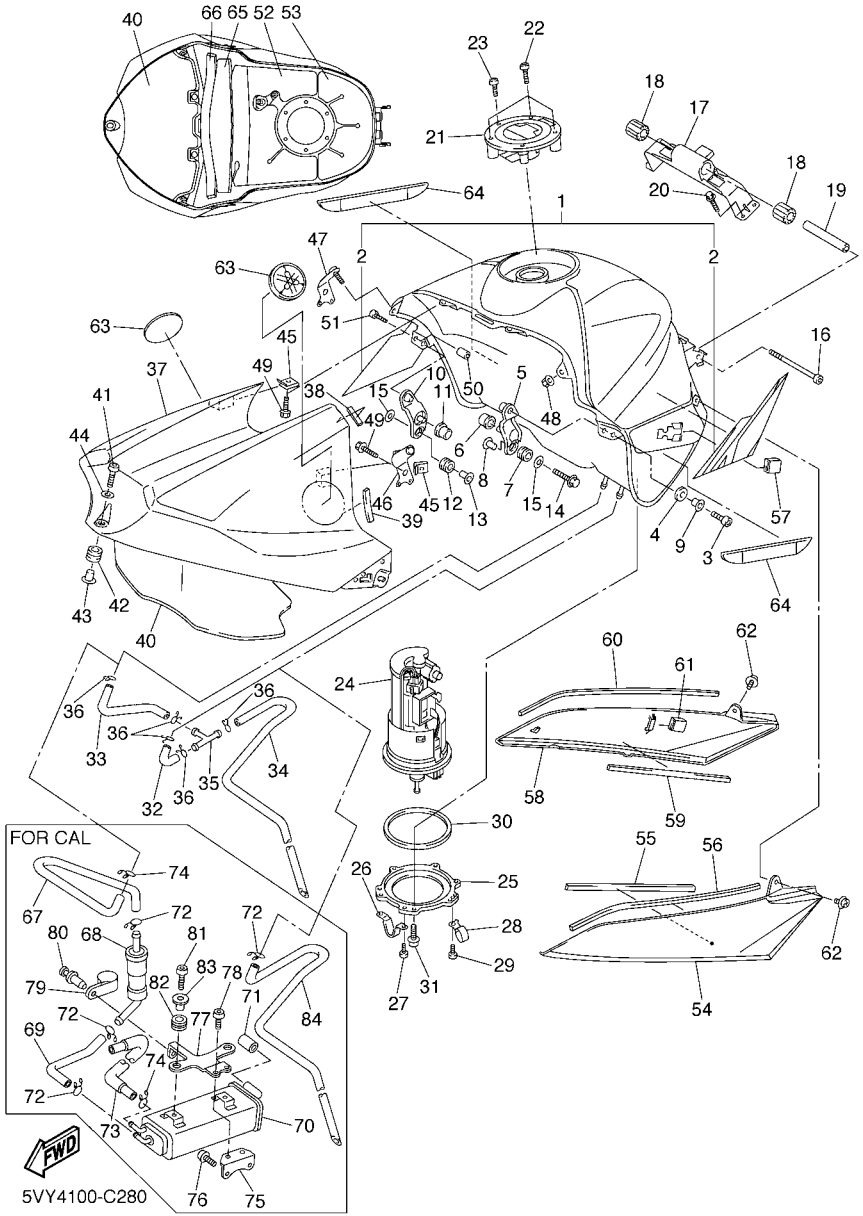

FIG. 28 FUEL TANK

REF. NO.	PART NO.	DESCRIPTION	5VY4	5VY5	5VY6			REMARKS
78	92017–06010	BOLT, BUTTON HEAD		2				
79	90461–15139	CLAMP		1				
80	90269–05001	RIVET		1				
81	92017–06016	BOLT, BUTTON HEAD		2				
82	90480–13018	GROMMET		2				
83	90387–062L2	COLLAR		2				
84	5VY–24312–00	PIPE 2		1				

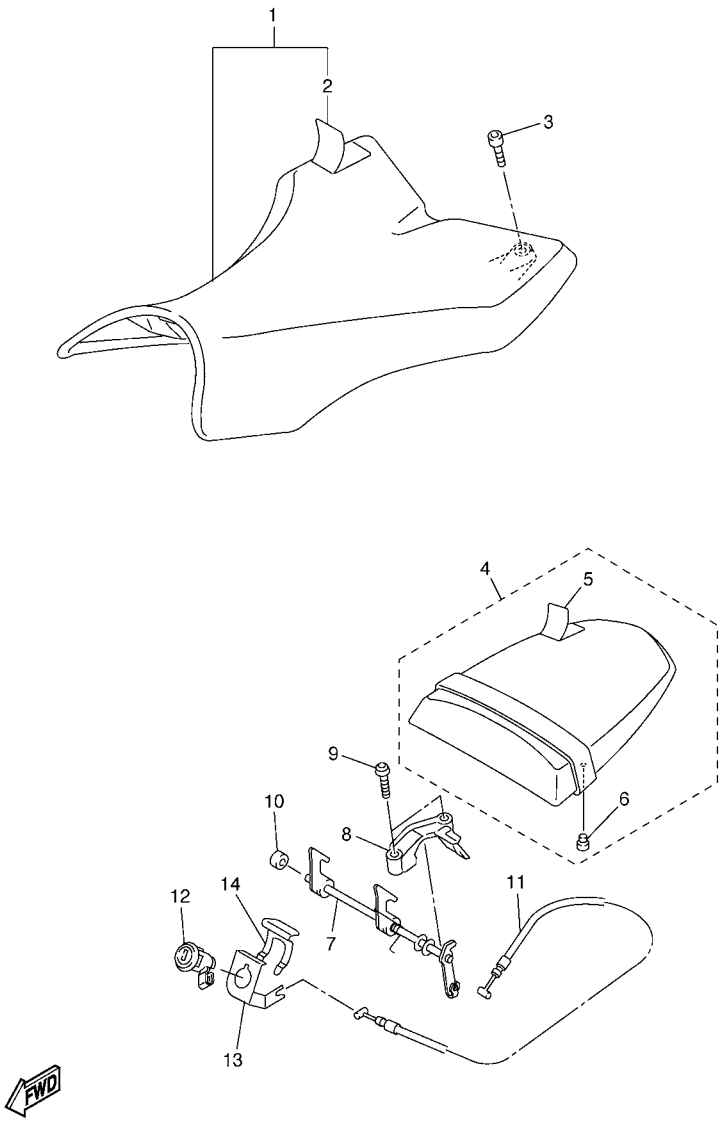

5VY1300-C290

FIG. 29 SEAT

REF. NO.	PART NO.	DESCRIPTION	5VY4	5VY5	5VY6			REMARKS
1	5VY–24710–00	SINGLE SEAT ASSY	1	1	1			
2	5VY–2470F–00	.SEAT COVER COMP.	1	1	1			
3	90110–06258	BOLT, HEXAGON SOCKET HEAD	2	2	2			
4	5VY–24750–00	TANDEM SEAT ASSY	1	1	1			
5	5VY–24751–00	.COVER, TANDEM SEAT	1	1	1			
6	5SL–24723–00	.DAMPER, SEAT	2	2	2			
7	5VY–24780–00	SEAT LOCK ASSY	1	1	1			
8	5VY–24792–00	PLATE	1	1	1			
9	92017–06025	BOLT, BUTTON HEAD	2	2	2			
10	5VY–24729–00	SPACER 2	1	1	1			
11	5VY–2478E–00	CABLE, SEAT LOCK	1	1	1			
12	5VY–W2470–00	SEAT LOCK ASSY	1	1	1			
13	5VY–2117K–01	STAY, LOCK	1	1	1			
14	5VY–2176V–00	SPRING, LOCK 2	1	1	1			

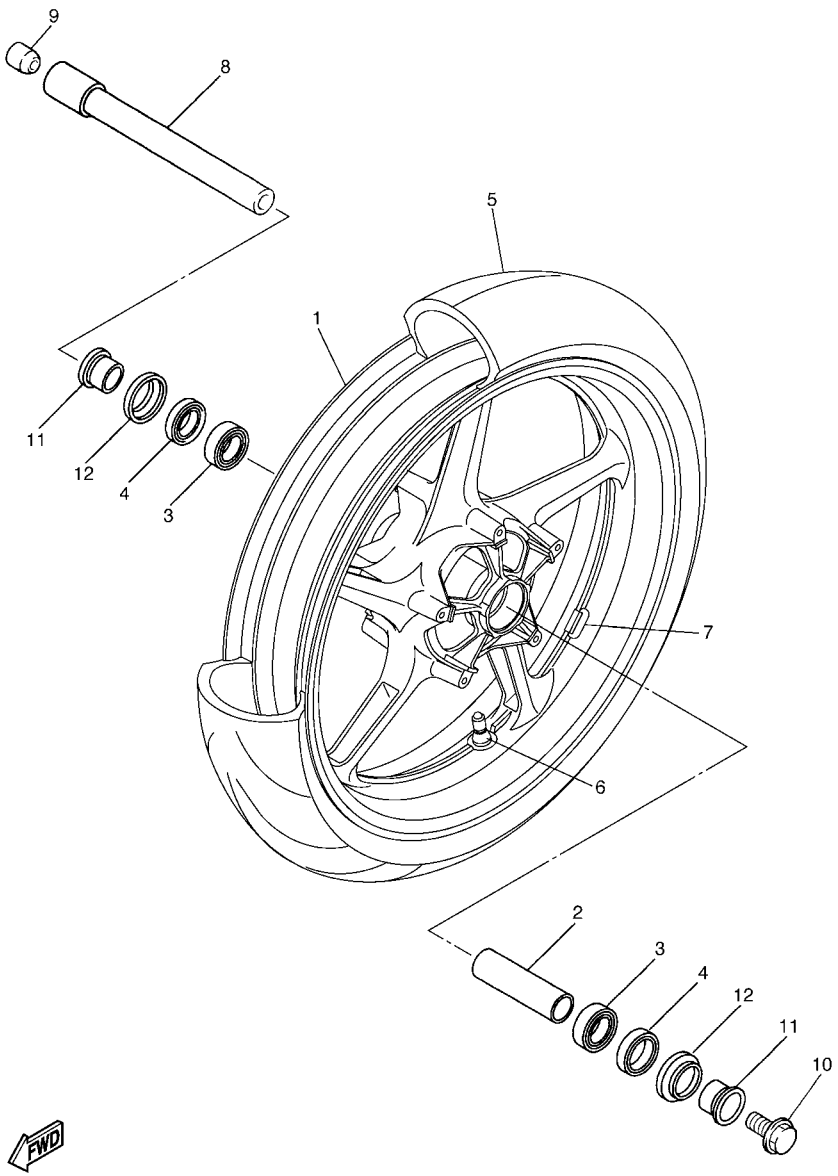

5VY1332-C300

FIG. 30 FRONT WHEEL

REF. NO.	PART NO.	DESCRIPTION	5VY4	5VY5	5VY6			REMARKS
1	5VY–25168–00–98	CAST WHEEL, FRONT	1	1	1			LGB
2	4XV–25117–00	SPACER, BEARING	1	1	1			
3	93306–00420	BEARING (B6004)	2	2	2			
4	93106–28043	OIL SEAL	2	2	2			
5	94112–17071	TIRE(120/70 ZR17M/C 58W D218F)	1	1	1			DUNLOP
6	93900–00030	VALVE, RIM (TR412)	1	1	1			TAIHEIYO
7	5MT–25398–00	BALANCER, WHEEL (10G)	1	1	1			UN
	5MT–25398–10	BALANCER, WHEEL (20G)	1	1	1			UN
	5MT–25398–20	BALANCER, WHEEL (30G)	1	1	1			UN
8	5PW–25181–00	AXLE, WHEEL	1	1	1			
9	5PW–25188–00	CAP	1	1	1			
10	90105–14002	BOLT, FLANGE	1	1	1			
11	4XV–25186–00	COLLAR, WHEEL	2	2	2			
12	4XV–25118–00	COVER, HUB DUST	2	2	2			

FIG. 31 FRONT BRAKE CALIPER

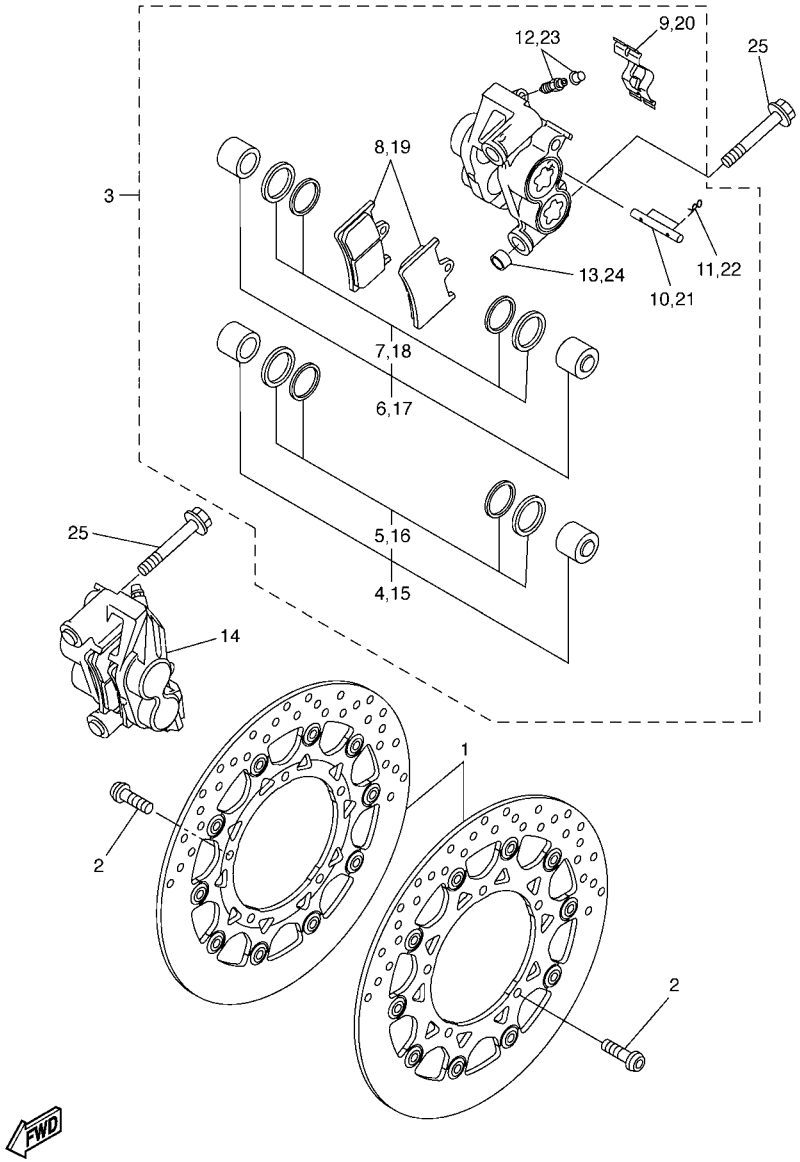

REF. NO.	PART NO.	DESCRIPTION	5VY4	5VY5	5VY6			REMARKS
1	5VY–2581T–20	DISK BRAKE ASSY	2	2	2			
2	90149–06043	SCREW	10	10	10			
3	5VY–2580T–00	CALIPER ASSY (LEFT)	1	1	1			
4	5PW–W0057–00	.PISTON ASSY, CALIPER	1	1	1			
5	5PW–W0047–00	..CALIPER SEAL KIT	1	1	1			
6	5PW–W0057–10	.PISTON ASSY, CALIPER	1	1	1			
7	5PW–W0047–10	..CALIPER SEAL KIT	1	1	1			
8	5VY–W0045–00	.BRAKE PAD KIT	1	1	1			
9	4SV–25919–00	.SUPPORT, PAD	1	1	1			
10	4SV–25924–00	.PIN, PAD	1	1	1			
11	3GM–25925–00	.CLIP	2	2	2			
12	1J3–W0048–00	.BLEED SCREW KIT	1	1	1			
13	5VY–2583B–00	.PIN, KNOCK	2	2	2			
14	5VY–2580U–00	CALIPER ASSY (RIGHT)	1	1	1			
15	5PW–W0057–00	.PISTON ASSY, CALIPER	1	1	1			
16	5PW–W0047–00	..CALIPER SEAL KIT	1	1	1			
17	5PW–W0057–10	.PISTON ASSY, CALIPER	1	1	1			
18	5PW–W0047–10	..CALIPER SEAL KIT	1	1	1			
19	5VY–W0045–00	.BRAKE PAD KIT	1	1	1			
20	4SV–25919–00	.SUPPORT, PAD	1	1	1			
21	4SV–25924–00	.PIN, PAD	1	1	1			
22	3GM–25925–00	.CLIP	2	2	2			
23	1J3–W0048–00	.BLEED SCREW KIT	1	1	1			
24	5VY–2583B–00	.PIN, KNOCK	2	2	2			
25	90401–10012	BOLT, UNION	4	4	4			

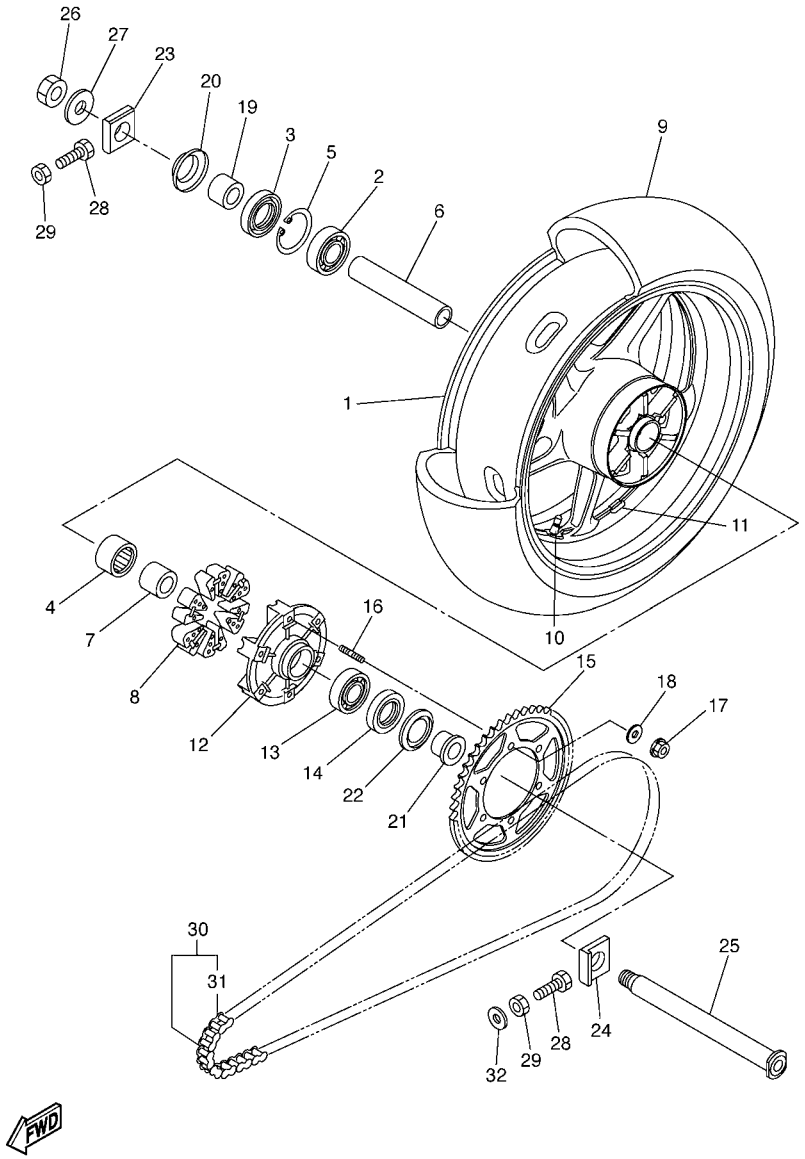

FIG. 32 REAR WHEEL

REF. NO.	PART NO.	DESCRIPTION	5VY4	5VY5	5VY6			REMARKS
1	5VY–25338–00–98	CAST WHEEL, REAR	1	1	1			LGB
2	93306–20531	BEARING	1	1	1			
3	93106–40013	OIL SEAL	1	1	1			
4	93317–43580	BEARING	1	1	1			
5	93420–61M07	CIRCLIP	1	1	1			
6	5PW–25317–00	SPACER, BEARING	1	1	1			
7	4XV–25383–00	COLLAR, WHEEL	1	1	1			
8	5VX–25364–00	DAMPER	6	6	6			
9	94119–17025	TIRE (190/50 ZR17M/C 73W D218)	1	1	1			DUNLOP
10	93900–00030	VALVE, RIM (TR412)	1	1	1			TAIHEIYO
11	5MT–25398–00	BALANCER, WHEEL (10G)	1	1	1			UN
	5MT–25398–10	BALANCER, WHEEL (20G)	1	1	1			UN
	5MT–25398–20	BALANCER, WHEEL (30G)	1	1	1			UN
12	5SL–25366–00	CLUTCH, HUB	1	1	1			
13	93306–20531	BEARING	1	1	1			
14	93106–40013	OIL SEAL	1	1	1			
15	5VY–25445–20	SPROCKET, DRIVEN (45T)	1	1	1			
16	90116–10485	BOLT, STUD	6	6	6			
17	90185–10009	NUT, SELF-LOCKING	6	6	6			
18	90201–10021	WASHER, PLATE	6	6	6			
19	5PW–25377–00	COLLAR, WHEEL	1	1	1			
20	5PW–25367–00	COVER, HUB DUST	1	1	1			
21	5SL–25376–00	COLLAR, WHEEL	1	1	1			
22	5SL–25367–00	COVER, HUB DUST	1	1	1			
23	5VY–25388–00	PULLER, CHAIN 1	1	1	1			
24	5VY–25389–00	PULLER, CHAIN 2	1	1	1			
25	5SL–25381–00	AXLE, WHEEL	1	1	1			

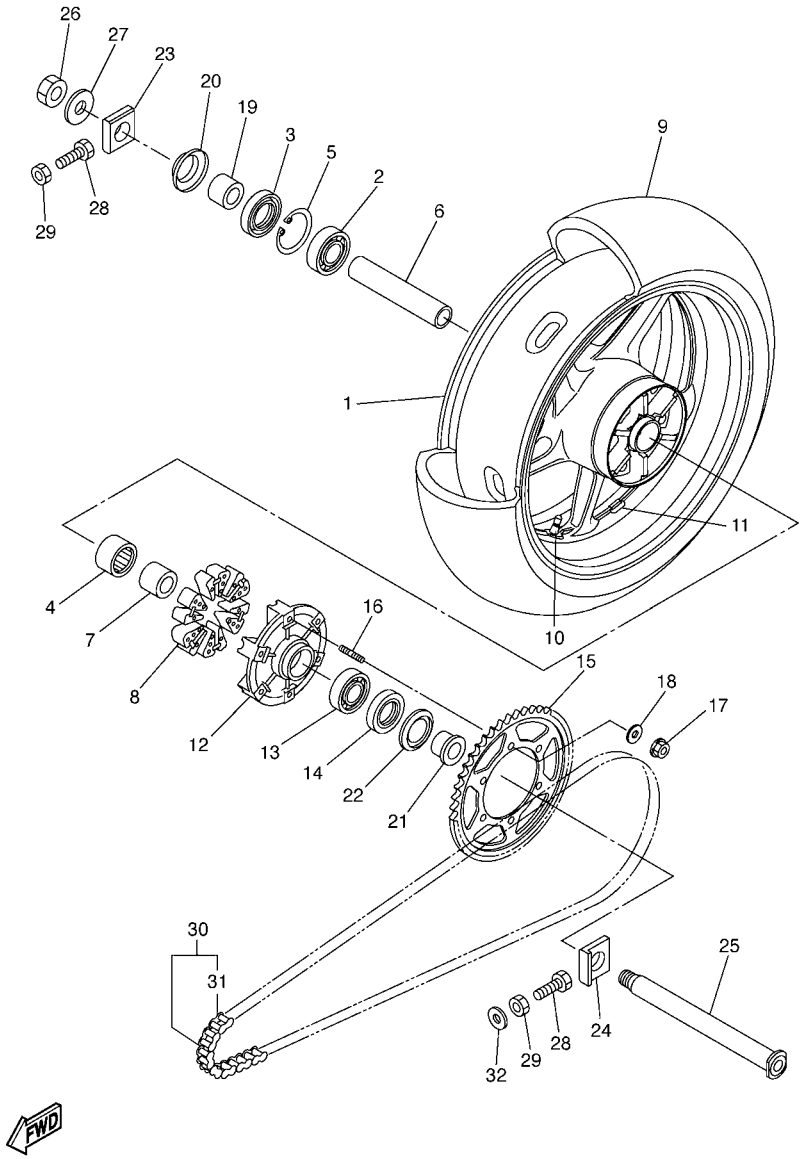

FIG. 32 REAR WHEEL

REF. NO.	PART NO.	DESCRIPTION	5VY4	5VY5	5VY6			REMARKS
26	90185–24165	NUT, SELF-LOCKING	1	1	1			
27	90201–257R5	WASHER, PLATE	1	1	1			
28	90101–08766	BOLT	2	2	2			
29	95307–08600	NUT	2	2	2			
30	94582–10116	CHAIN (DID50VA8-116L)	1	1	1			
31	94682–05031	.JOINT, CHAIN (DID 50VA8-ZJ)	1	1	1			
32	90201–086P8	WASHER, PLATE	2	2	2			

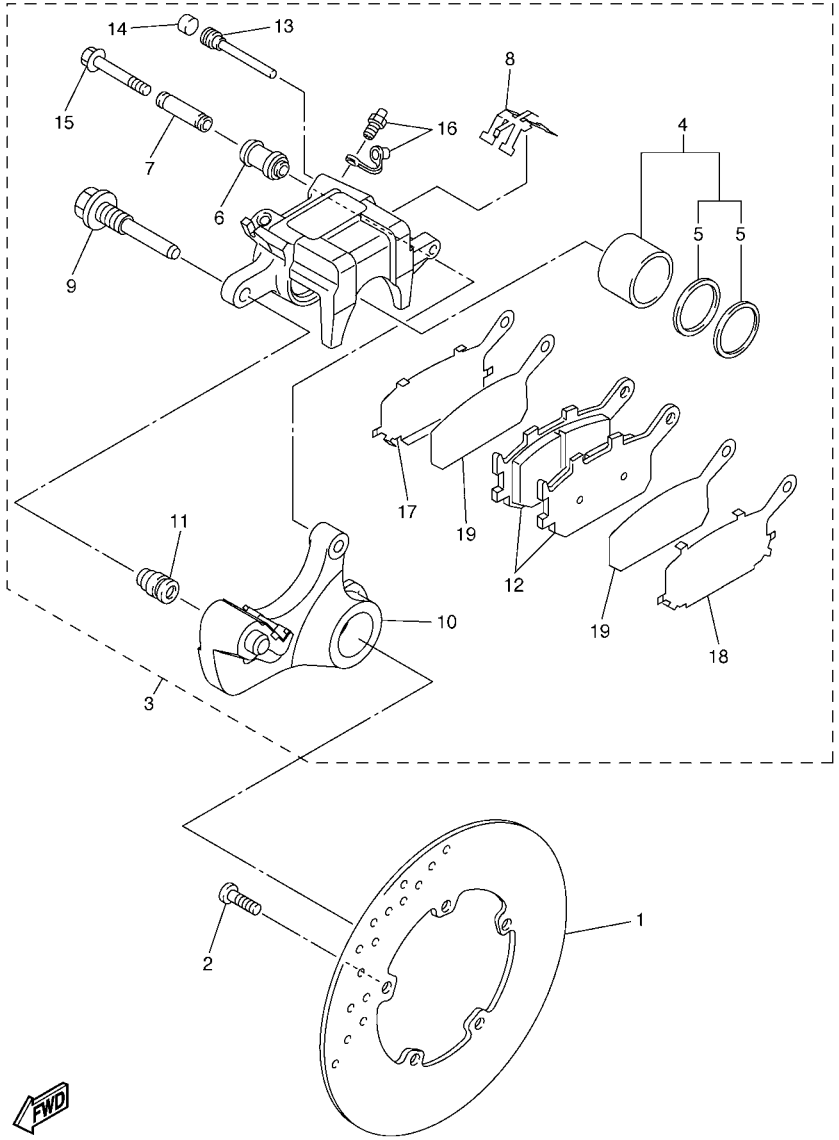

5VY1300-C330

FIG. 33 REAR BRAKE CALIPER

REF. NO.	PART NO.	DESCRIPTION	5VY4	5VY5	5VY6			REMARKS
1	5SL–2582W–00	DISK, REAR BRAKE 2	1	1	1			
2	90149–08009	SCREW	5	5	5			
3	5VY–2580W–00	CALIPER ASSY, REAR 2	1	1	1			
4	5VY–W0057–00	.PISTON ASSY, CALIPER	1	1	1			
5	5SL–W0047–00	..CALIPER SEAL KIT	1	1	1			
6	5SL–25917–00	.BOOT, CALIPER	1	1	1			
7	5SL–25838–00	.SLEEVE, CALIPER	1	1	1			
8	5SL–25919–00	.SUPPORT, PAD	1	1	1			
9	5SL–25914–00	.PIN, SLIDE	1	1	1			
10	5VY–25921–50	.BRACKET, SUPPORT	1	1	1			
11	3JD–25917–00	.BOOT, CALIPER	1	1	1			
12	5VX–W0046–00	.BRAKE PAD KIT 2	1	1	1			
13	8CR–25924–00	.PIN, PAD	1	1	1			
14	5DH–25916–00	.PLUG	1	1	1			
15	5SL–25926–00	.BOLT	1	1	1			
16	1UY–W0048–00	.BLEED SCREW KIT	1	1	1			
17	5SL–25827–00	.SHIM, CALIPER	1	1	1			
18	5SL–25827–10	.SHIM, CALIPER	1	1	1			
19	5SL–25828–00	.SHIM, CALIPER	2	2	2			

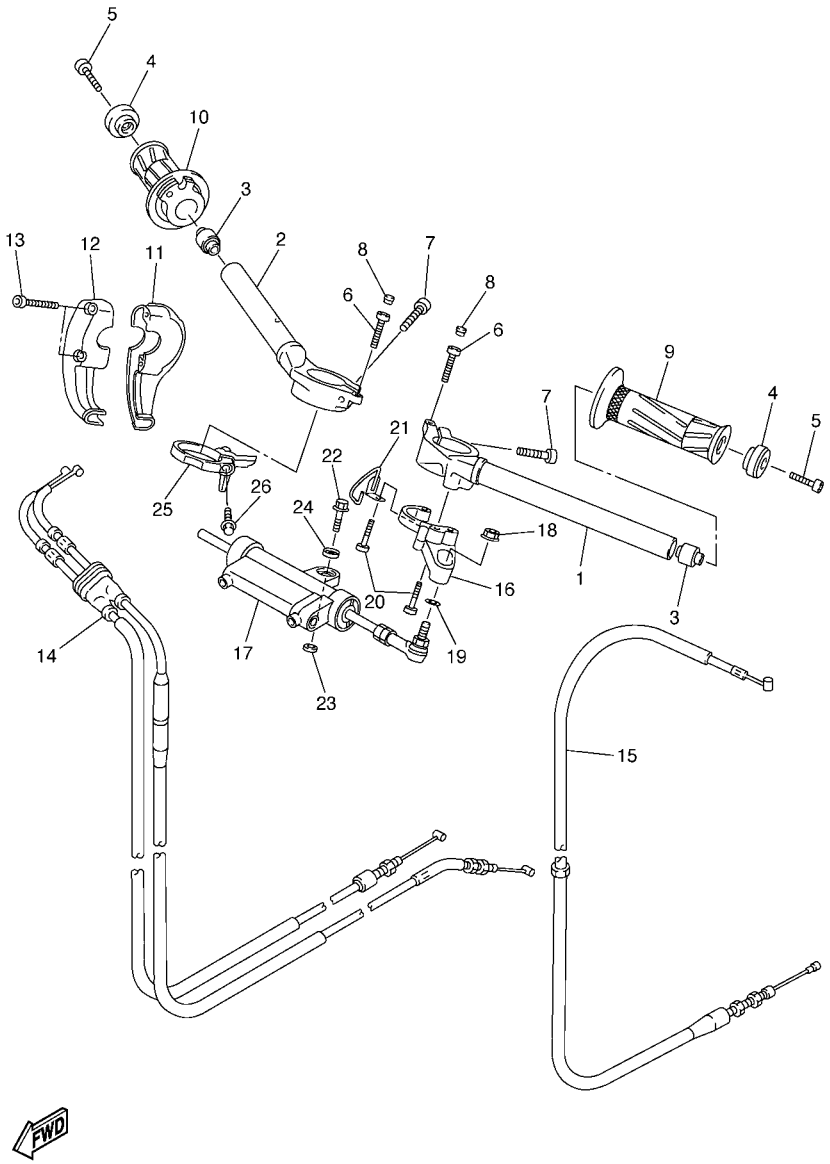

5VY1300-C340

FIG. 34 STEERING HANDLE & CABLE

REF. NO.	PART NO.	DESCRIPTION	5VY4	5VY5	5VY6			REMARKS
1	5VY–26121–00	HANDLEBAR (LEFT)	1	1	1			
2	5VY–26122–00	HANDLEBAR (RIGHT)	1	1	1			
3	4XV–23434–00	HOLDER, DAMPER	2	2	2			
4	5PW–26246–00	END, GRIP	2	2	2			
5	91317–06025	BOLT	2	2	2			
6	91317–06025	BOLT	2	2	2			
7	91314–08030	BOLT	2	2	2			
8	2H9–23469–00	CAP, BOLT	2	2	2			
9	4YR–26241–01	GRIP (LEFT)	1	1	1			
10	4YR–26240–01	GRIP ASSY	1	1	1			
11	5VY–26281–00	CAP, GRIP UPPER	1	1	1			
12	3XW–26282–01	CAP, GRIP LOWER	1	1	1			
13	90110–05018	BOLT, HEXAGON SOCKET HEAD	2	2	2			
14	5VY–26302–00	THROTTLE CABLE ASSY	1	1	1			
15	5VY–26335–00	CABLE, CLUTCH	1	1	1			
16	5VY–23495–00	STAY, DAMPER	1	1	1			
17	5VY–23490–00	HANDLEBAR SHIMMY DAMPER ASSY	1	1	1			
18	95607–08200	NUT, SELF-LOCKING	1	1	1			
19	90201–08M09	WASHER, PLATE	1	1	1			
20	90110–06181	BOLT, HEXAGON SOCKET HEAD	3	3	3			
21	5VY–23389–00	GUIDE, CABLE	1	1	1			
22	95807–08030	BOLT, FLANGE	1	1	1			
23	90201–08676	WASHER, PLATE	1	1	1			
24	5VY–26398–00	WASHER	1	1	1			
25	5VY–2631E–00	WIRE GUIDE ASSY.,1	1	1	1			
26	90110–05014	BOLT, HEXAGON SOCKET HEAD	1	1	1			

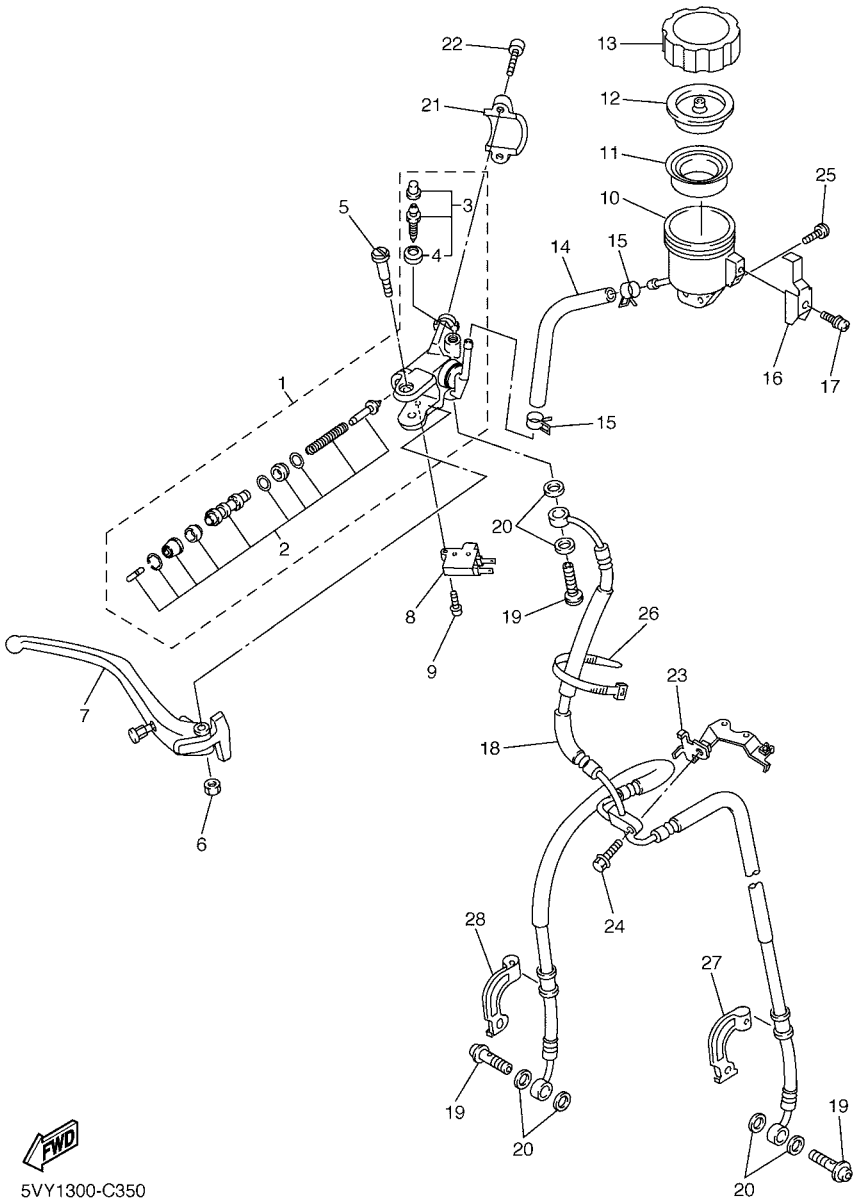

FIG. 35 FRONT MASTER CYLINDER

REF. NO.	PART NO.	DESCRIPTION	5VY4	5VY5	5VY6			REMARKS
1	5VY–W2587–00	MASTER CYLINDER SUB ASSY	1	1	1			
2	5VY–W0041–00	.CYLINDER KIT, MASTER	1	1	1			
3	5VY–W0048–00	.BLEED SCREW KIT	1	1	1			
4	5VY–25975–00	..SEAL 1	1	1	1			
5	5VY–2589F–00	BOLT, LEVER	1	1	1			
6	5VS–2586F–00	NUT, COVER	1	1	1			
7	5VY–83922–00	LEVER 2	1	1	1			
8	4HM–83980–00	FRONT STOP SWITCH ASSY	1	1	1			
9	5VS–2585H–00	SCREW,SET	1	1	1			
10	5VY–25894–00	TANK, RESERVOIR	1	1	1			
11	5VY–25854–00	DIAPHRAGM, RESERVOIR	1	1	1			
12	5VY–25855–00	BUSH,DIAPHRAGM	1	1	1			
13	5VY–25852–00	CAP, RESERVOIR	1	1	1			
14	5SL–25895–00	HOSE, RESERVOIR	1	1	1			
15	90467–090A1	CLIP	2	2	2			
16	5VY–2589G–00	HOLDER	1	1	1			
17	5VY–2589H–00	SCREW	1	1	1			
18	5VY–25872–00	HOSE, BRAKE 1	1	1	1			
19	90401–10172	BOLT, UNION	3	3	3			
20	90201–10118	WASHER, PLATE	6	6	6			
21	5VS–25867–00	BRACKET, MASTER CYLINDER	1	1	1			
22	5VS–26332–00	BOLT	2	2	2			
23	5VY–23377–00	BRACKET, HORN	1	1	1			
24	90105–06041	BOLT, FLANGE	1	1	1			
25	90149–05299	SCREW	1	1	1			
26	3MA–82591–00	BAND	2	2	2			
27	5VY–25875–00	HOLDER, BRAKE HOSE 1	1	1	1			

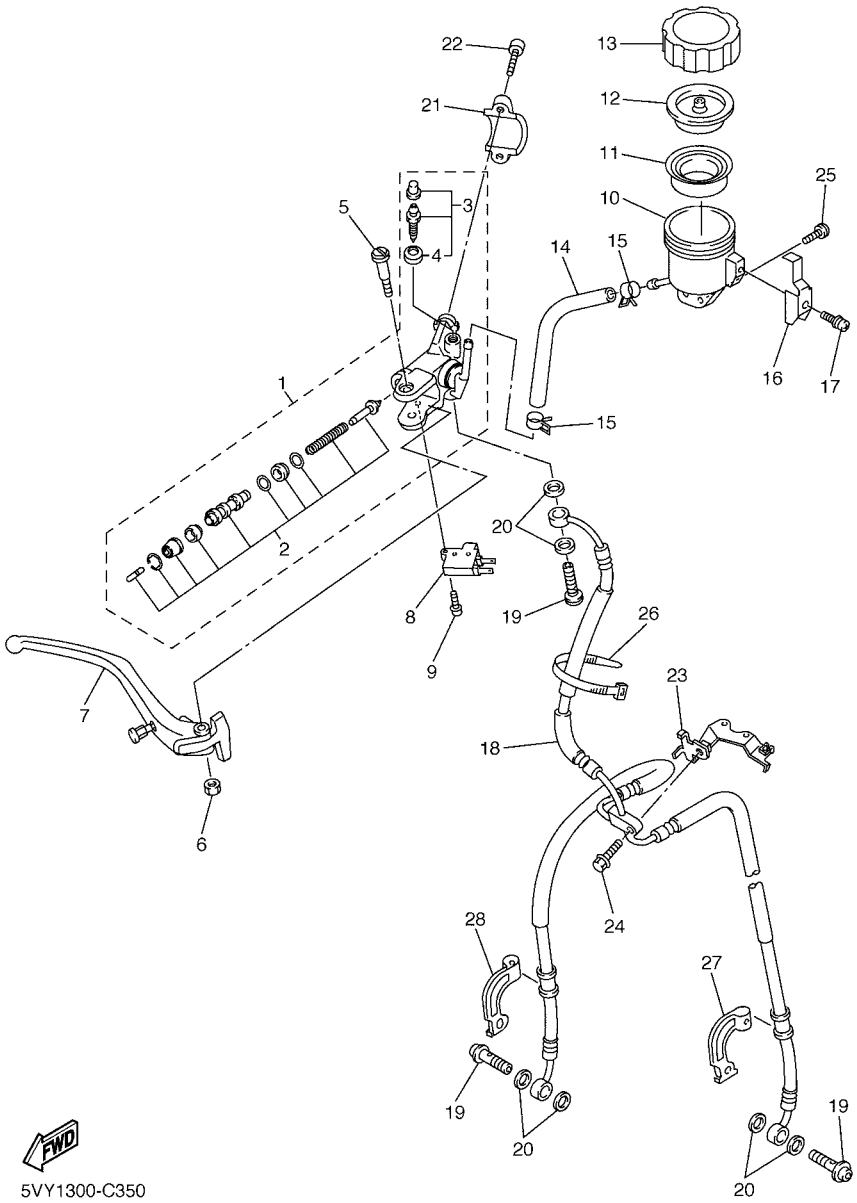

FIG. 35 FRONT MASTER CYLINDER

REF. NO.	PART NO.	DESCRIPTION	5VY4	5VY5	5VY6			REMARKS
28	5VY–25876–00	HOLDER, BRAKE HOSE 2	1	1	1			

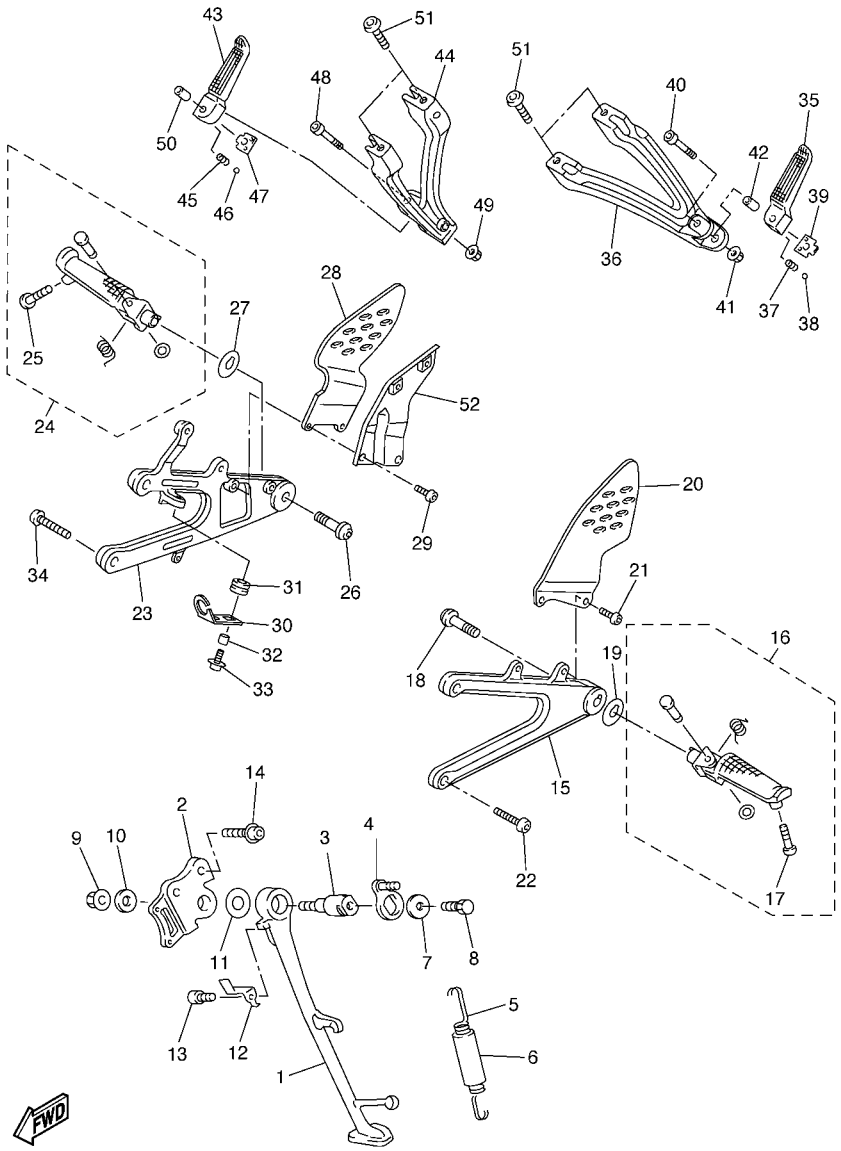

FIG. 36 STAND & FOOTREST

REF. NO.	PART NO.	DESCRIPTION	5VY4	5VY5	5VY6			REMARKS
1	5VY–27311–00	STAND, SIDE	1	1	1			
2	5JJ–27321–00	BRACKET, SIDE STAND	1	1	1			
3	4NX–27351–00	GUIDE, SIDE STAND	1	1	1			
4	5PW–27352–00	HOOK, SIDE STAND	1	1	1			
5	90506–18008	SPRING, TENSION	1	1	1			
6	90445–19002	HOSE (L60)	1	1	1			
7	90201–081R9	WASHER, PLATE	1	1	1			
8	90101–08662	BOLT	1	1	1			
9	95607–10200	NUT, U FLANGE	1	1	1			
10	90201–101J1	WASHER, PLATE	1	1	1			
11	90201–146F9	WASHER, PLATE	1	1	1			
12	5JJ–27315–00	LINK, SIDE STAND	1	1	1			
13	91317–06012	BOLT	1	1	1			
14	90109–10002	BOLT	2	2	2			
15	5VY–27442–01	BRACKET 2	1	1	1			
16	5VY–27410–00	FRONT FOOTREST ASSY (LEFT)	1	1	1			
17	90109–083E0	.BOLT	1	1	1			
18	90109–103A9	BOLT	1	1	1			
19	90214–10002	WASHER, CLAW	1	1	1			
20	5VY–27445–00	PLATE 1	1	1	1			
21	90111–06003	BOLT	2	2	2			
22	90109–085G6	BOLT	2	2	2			
23	5VY–27443–01	BRACKET 3	1	1	1			
24	5VY–27420–00	FRONT FOOTREST ASSY (RIGHT)	1	1	1			
25	90109–083E0	.BOLT	1	1	1			
26	90109–103A9	BOLT	1	1	1			
27	90214–10002	WASHER, CLAW	1	1	1			

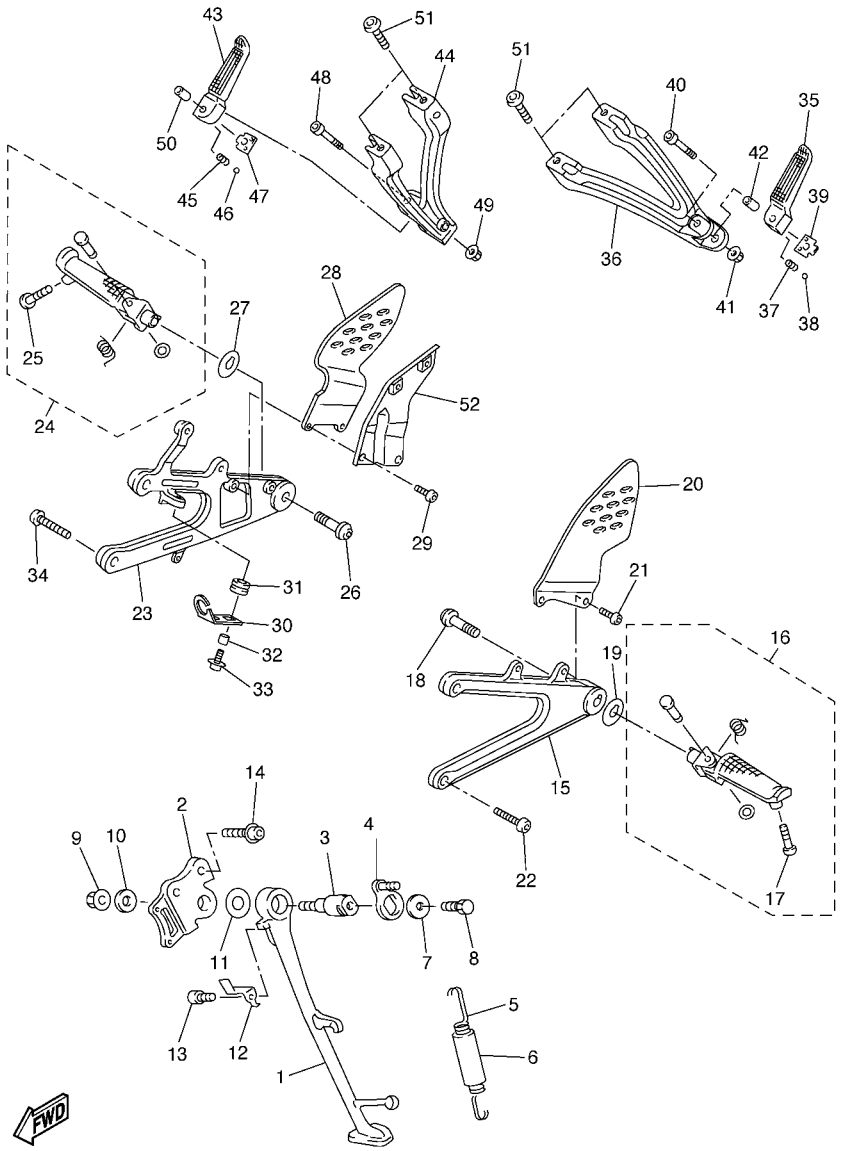

FIG. 36 STAND & FOOTREST

REF. NO.	PART NO.	DESCRIPTION	5VY4	5VY5	5VY6			REMARKS
28	5VY–27446–00	PLATE 2	1	1	1			
29	90149–06304	SCREW	2	2	2			
30	5VY–2144G–00	STAY, STOP SWITCH	1	1	1			
31	90480–12607	GROMMET	1	1	1			
32	90387–06023	COLLAR	1	1	1			
33	90159–06150	SCREW, WITH WASHER	1	1	1			
34	90109–085G6	BOLT	2	2	2			
35	5JJ–27431–00	FOOTREST, REAR 1	1	1	1			
36	5VY–2741L–00	BRACKET 4	1	1	1			
37	90501–12743	SPRING, COMPRESSION	1	1	1			
38	93501–04011	BALL	1	1	1			
39	5JJ–27437–00	WASHER, SPECIAL	1	1	1			
40	91314–06035	BOLT	1	1	1			
41	95604–06200	NUT, U FLANGE	1	1	1			
42	90387–06697	COLLAR	1	1	1			
43	5JJ–27441–00	FOOTREST, REAR 2	1	1	1			
44	5VY–2742L–00	BRACKET 5	1	1	1			
45	90501–12743	SPRING, COMPRESSION	1	1	1			
46	93501–04011	BALL	1	1	1			
47	5JJ–27437–00	WASHER, SPECIAL	1	1	1			
48	91314–06035	BOLT	1	1	1			
49	95604–06200	NUT, U FLANGE	1	1	1			
50	90387–06697	COLLAR	1	1	1			
51	92017–08020	BOLT, BUTTON HEAD	4	4	4			
52	5VY–27425–00	BRACKET, FOOTREST 2	1	1	1			

FIG. 37 REAR MASTER CYLINDER

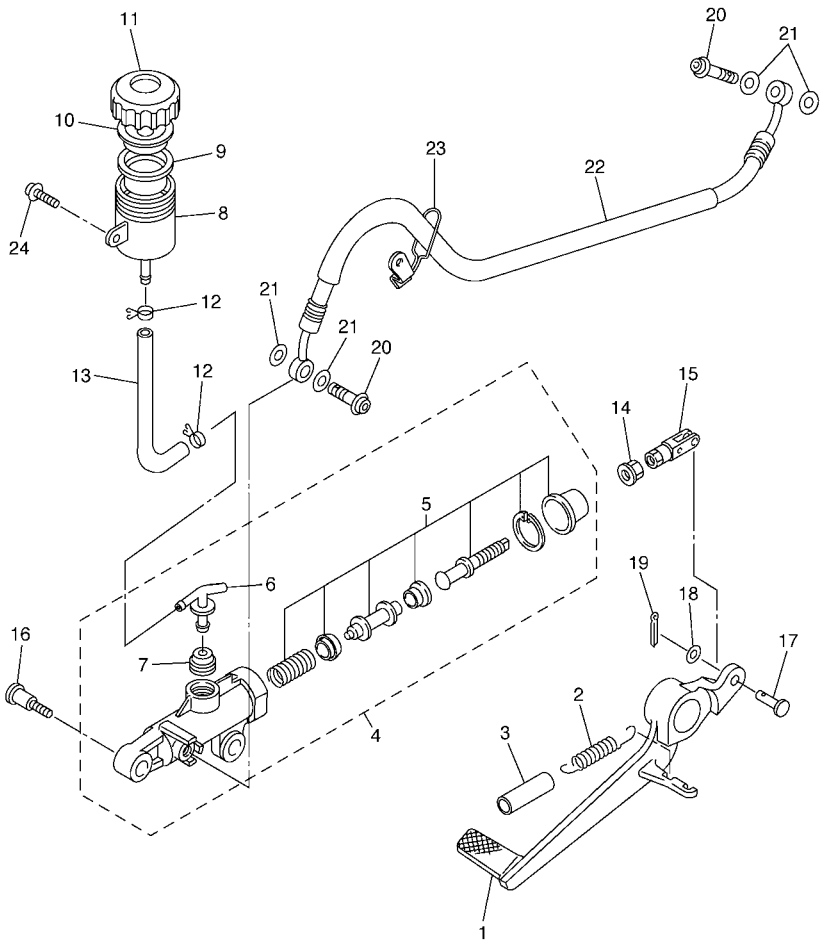

5VY1300-C370

REF. NO.	PART NO.	DESCRIPTION	5VY4	5VY5	5VY6			REMARKS
1	5VY–27211–00	PEDAL, BRAKE	1	1	1			
2	90506–20193	SPRING, TENSION	1	1	1			
3	90446–15386	HOSE	1	1	1			
4	5SL–2583V–00	RR. MASTER CYLINDER ASSY.	1	1	1			
5	5SL–W0042–50	.CYLINDER KIT, MASTER	1	1	1			
6	5SL–2582A–00	.JOINT	1	1	1			
7	4BP–2585F–00	.BUSH	1	1	1			
8	5SL–25894–00	TANK, RESERVOIR	1	1	1			
9	5SL–25854–00	DIAPHRAGM, RESERVOIR	1	1	1			
10	5SL–25855–00	BUSH,DIAPHRAGM	1	1	1			
11	5SL–25852–00	CAP, RESERVOIR	1	1	1			
12	90467–010A0	CLIP	2	2	2			
13	5VY–25895–00	HOSE, RESERVOIR	1	1	1			
14	95307–08700	NUT	1	1	1			
15	5SL–27222–00	JOINT	1	1	1			
16	90109–06013	BOLT	2	2	2			
17	91701–06018	PIN, CLEVIS	1	1	1			
18	92907–06200	WASHER	1	1	1			
19	91401–16012	PIN, COTTER	1	1	1			
20	90401–10172	BOLT, UNION	2	2	2			
21	90201–10118	WASHER, PLATE	4	4	4			
22	5VY–25874–00	HOSE, BRAKE	1	1	1			
23	5VY–25886–00	HOLDER, BRAKE HOSE	1	1	1			
24	90159–06056	SCREW, WITH WASHER	1	1	1			

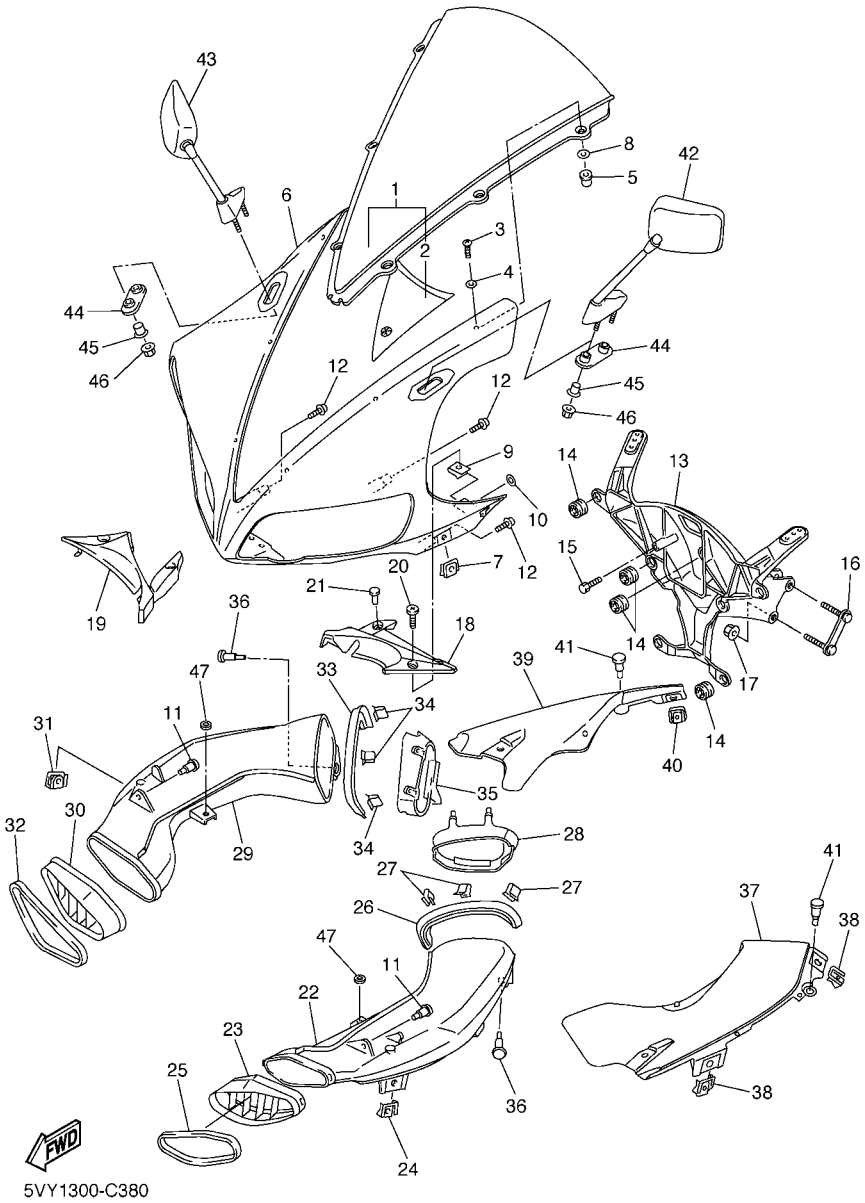

FIG. 38 COWLING 1

REF. NO.	PART NO.	DESCRIPTION	5VY4	5VY5	5VY6			REMARKS
1	5VY–Y2881–10	WINDSHIELD	1	1				
	5VY–Y2881–20	WINDSHIELD			1			
2	5VY–2832P–00	.GRAPHIC 18	1	1	1			
3	90150–05024	SCREW, ROUND HEAD	6	6	6			
4	90202–05123	WASHER, PLATE	6	6	6			
5	90179–05523	NUT	6	6	6			
6	5VY–2835G–00–P0	BODY, FRONT UPPER 1	1	1	1			UR DRMK
	5VY–2835G–00–P1	BODY, FRONT UPPER 1	1	1	1			UR DPBMC
	5VY–2835G–00–P3	BODY, FRONT UPPER 1	1	1	1			UR BS4
7	5PW–2177L–00	PLATE, SPRING	2	2	2			
8	5JJ–2834W–00	PROTECTOR 2	6	6	6			
9	90183–05074	NUT, SPRING	2	2	2			
10	5VY–2834V–00	PROTECTOR 1	2	2	2			
11	90269–07007	RIVET	2	2	2			
12	90160–05007	SCREW, ROUND TAPPING	5	5	5			
13	5VY–28356–00	STAY 1	1	1	1			
14	4XV–83513–00	DAMPER	9	9	9			
15	91317–05012	BOLT	1	1	1			
16	4XV–28336–00	PLATE	1	1	1			
17	95607–08200	NUT, SELF-LOCKING	2	2	2			
18	5VY–2837L–00	PANEL, CONSOLE 1	1	1	1			
19	5VY–2837M–00	PANEL, CONSOLE 2	1	1	1			
20	90154–05013	SCREW, BINDING	2	2	2			
21	90269–06001	RIVET	2	2	2			
22	5VY–2838N–00–P0	DUCT 1	1	1	1			FOR DRMK,DPBMC
	5VY–2838N–00–P2	DUCT 1	1	1	1			FOR BS4
23	5VY–2837N–00	GRILL, AIR INTAKE 1	1	1	1			

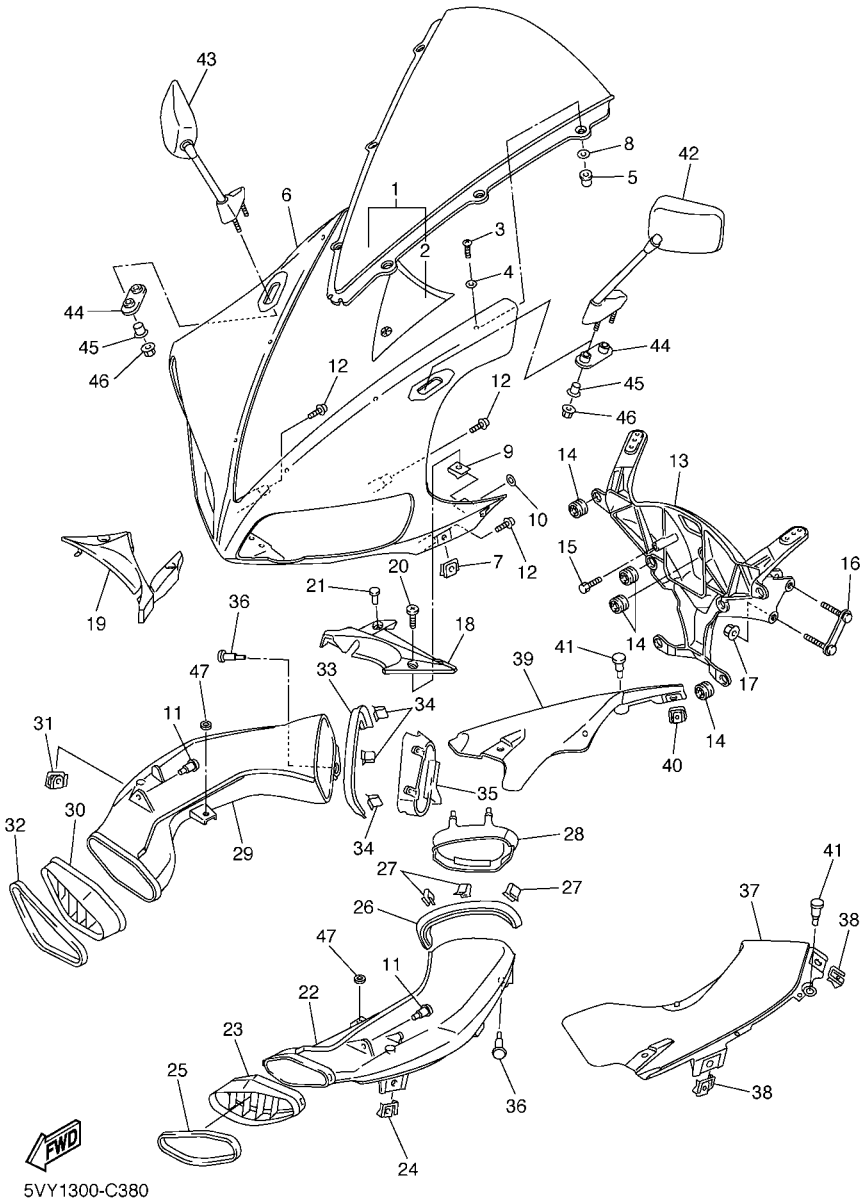

5VY1300-C380

FIG. 38 COWLING 1

REF. NO.	PART NO.	DESCRIPTION	5VY4	5VY5	5VY6			REMARKS
24	5PW–2177L–00	PLATE, SPRING	1	1	1			
25	5VY–28346–00	MOLE 2	1	1	1			
26	5VY–2834E–00	DAMPER 1	1	1	1			
27	1FK–2171H–00	GUIDE	3	3	3			
28	5VY–28371–00	DAMPER	1	1	1			
29	5VY–2838R–00–P0	DUCT 2	1	1	1			FOR DRMK,DPBMC
	5VY–2838R–00–P2	DUCT 2	1	1	1			FOR BS4
30	5VY–2837R–00	GRILL, AIR INTAKE 2	1	1	1			
31	5PW–2177L–00	PLATE, SPRING	1	1	1			
32	5VY–28346–00	MOLE 2	1	1	1			
33	5VY–2834F–00	DAMPER	1	1	1			
34	1FK–2171H–00	GUIDE	3	3	3			
35	5VY–28372–00	DAMPER	1	1	1			
36	90269–07007	RIVET	2	2	2			
37	5VY–2837V–00	GRILL, AIR OUTLET 1	1	1	1			
38	5PW–2177L–00	PLATE, SPRING	2	2	2			
39	5VY–2837W–00	GRILL, AIR OUTLET 2	1	1	1			
40	5PW–2177L–00	PLATE, SPRING	2	2	2			
41	90269–06081	RIVET	4	4	4			
42	5VY–26280–00	REAR VIEW MIRROR ASSY (LEFT)	1	1	1			
43	5VY–26290–00	REAR VIEW MIRROR ASSY (RIGHT)	1	1	1			
44	5VY–26298–00	PLATE, MIRROR FITTING 1	2	2	2			
45	90387–06372	COLLAR	4	4	4			
46	90176–06055	NUT, CROWN	4	4	4			
47	5SL–84753–00	DAMPER	2	2	2			

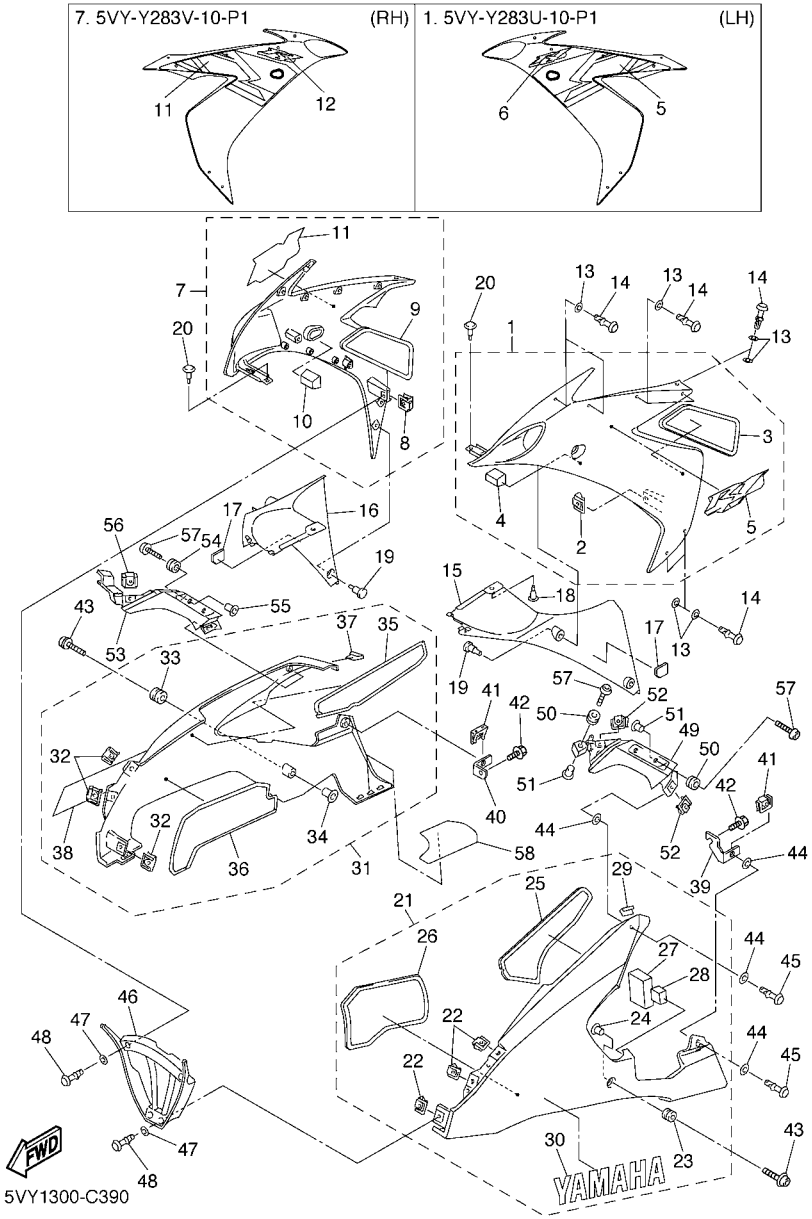

FIG. 39 COWLING 2

REF. NO.	PART NO.	DESCRIPTION	5VY4	5VY5	5VY6			REMARKS
1	5VY–Y283U–00–P0	PANEL ASSEMBLY 1	1	1	1			UR DRMK
	5VY–Y283U–10–P1	PANEL ASSEMBLY 1	1	1	1			UR DPBMC
	5VY–Y283U–20–P2	PANEL ASSEMBLY 1	1	1	1			UR S3 FOR BS4
2	5PW–2177L–00	.PLATE, SPRING	1	1	1			
3	5VY–2848H–00	.SEAT	1	1	1			
4	5VY–28322–00	.STAY 2	1	1	1			
5	5VY–2834C–00	.EMBLEM 1	1	1	1			UR FOR DRMK
	5VY–28391–00	.GRAPHIC 1	1	1	1			UR FOR DPBMC
	5VY–2834C–10	.EMBLEM 1	1	1	1			UR FOR BS4
6	5VY–2836C–00	.EMBLEM	1	1	1			FOR DPBMC
7	5VY–Y283V–00–P0	PANEL ASSEMBLY 2	1	1	1			UR DRMK
	5VY–Y283V–10–P1	PANEL ASSEMBLY 2	1	1	1			UR DPBMC
	5VY–Y283V–20–P2	PANEL ASSEMBLY 2	1	1	1			UR S3 FOR BS4
8	5PW–2177L–00	.PLATE, SPRING	1	1	1			
9	5VY–2848K–00	.SEAT 2	1	1	1			
10	5VY–28332–00	.STAY, LEG SHIELD	1	1	1			
11	5VY–2835C–00	.EMBLEM 2	1	1	1			UR FOR DRMK
	5VY–28392–00	.GRAPHIC 2	1	1	1			UR FOR DPBMC
	5VY–2835C–10	.EMBLEM 2	1	1	1			UR FOR BS4
12	5VY–2837C–00	.EMBLEM	1	1	1			FOR DPBMC
13	2TK–21757–00	WASHER, SPECIAL 1	20	20	20			
14	5PW–28386–00	HEAD	14	14	14			
15	5VY–2836K–00	PANEL, INNER 1	1	1	1			
16	5VY–2836L–00	PANEL, INNER 2	1	1	1			
17	5VY–28494–00	HOOK 3	2	2	2			
18	90269–07077	RIVET	1	1	1			
19	90269–06081	RIVET	4	4	4			

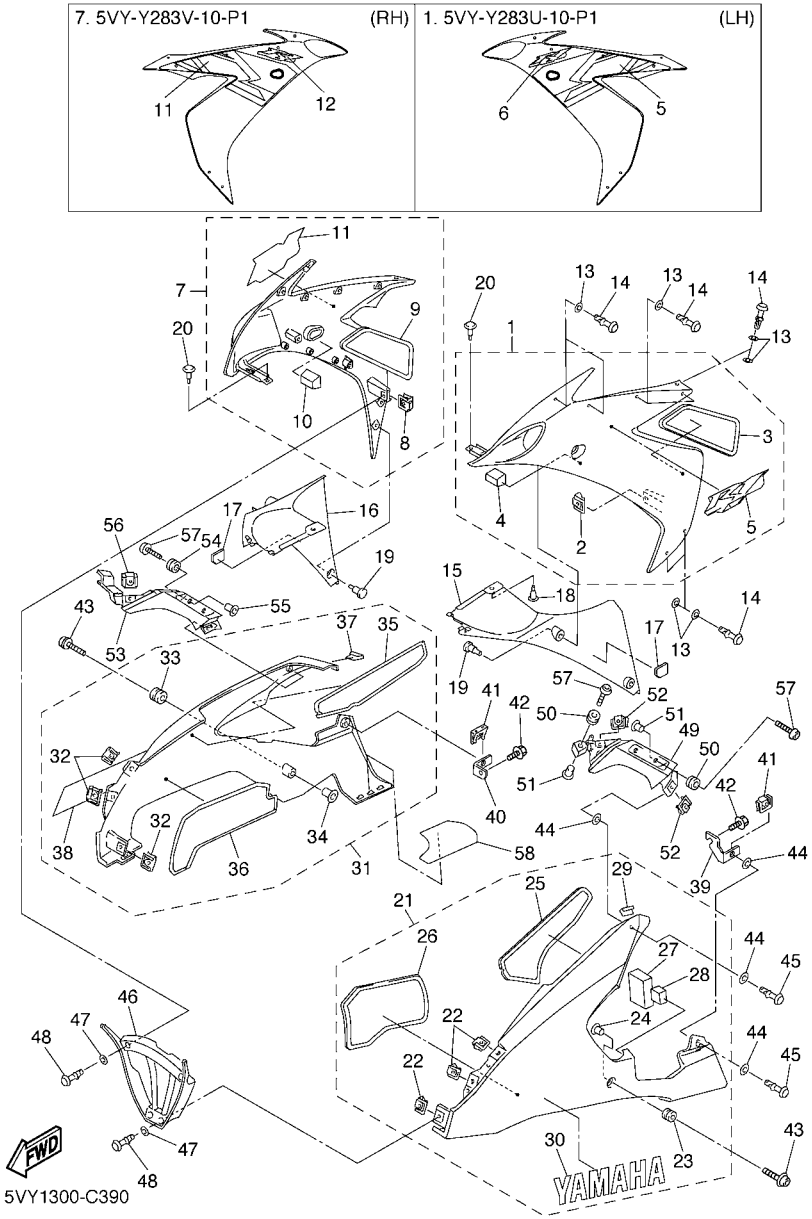

FIG. 39 COWLING 2

REF. NO.	PART NO.	DESCRIPTION	5VY4	5VY5	5VY6			REMARKS
20	90269–07077	RIVET	2	2	2			
21	5VY–Y2808–00–P0	COVER ASSY, UNDER	1	1	1			UR MBL2 FOR DRMK
	5VY–Y2808–20–P1	COVER ASSY, UNDER	1	1	1			UR DPBMC
	5VY–Y2808–10–P2	COVER ASSY, UNDER	1	1	1			UR BS4
22	5PW–2177L–00	.PLATE, SPRING	3	3	3			
23	90480–12596	.GROMMET	1	1	1			
24	90387–065J6	.COLLAR	1	1	1			
25	5VY–2848L–00	.SEAT 3	1	1	1			
26	5VY–2848N–00	.SEAT 5	1	1	1			
27	5VY–2837J–00	.DAMPER 5	1	1	1			
28	5VY–2837K–00	.DAMPER 6	1	1	1			
29	5VY–28307–00	.SEAL	1	1	1			
30	5JJ–2153E–10	.EMBLEM, YAMAHA	1	1	1			UR FOR DRMK
	5JJ–2153E–00	.EMBLEM, YAMAHA	1	1	1			UR FOR DPBMC
	5JJ–2153E–20	.EMBLEM, YAMAHA	1	1	1			UR FOR BS4
31	5VY–Y2809–00–P0	COVER ASSY 2, UNDER	1	1	1			UR MBL2 FOR DRMK
	5VY–Y2809–20–P1	COVER ASSY 2, UNDER	1	1	1			UR DPBMC
	5VY–Y2809–10–P2	COVER ASSY 2, UNDER	1	1	1			UR BS4
32	5PW–2177L–00	.PLATE, SPRING	3	3	3			
33	90480–12596	.GROMMET	1	1	1			
34	90387–065J6	.COLLAR	1	1	1			
35	5VY–2848M–00	.SEAT 4	1	1	1			
36	5VY–2848P–00	.SEAT 6	1	1	1			
37	5VY–28307–00	.SEAL	1	1	1			
38	5JJ–2153E–10	.EMBLEM, YAMAHA	1	1	1			UR FOR DRMK
	5JJ–2153E–00	.EMBLEM, YAMAHA	1	1	1			UR FOR DPBMC
	5JJ–2153E–20	.EMBLEM, YAMAHA	1	1	1			UR FOR BS4

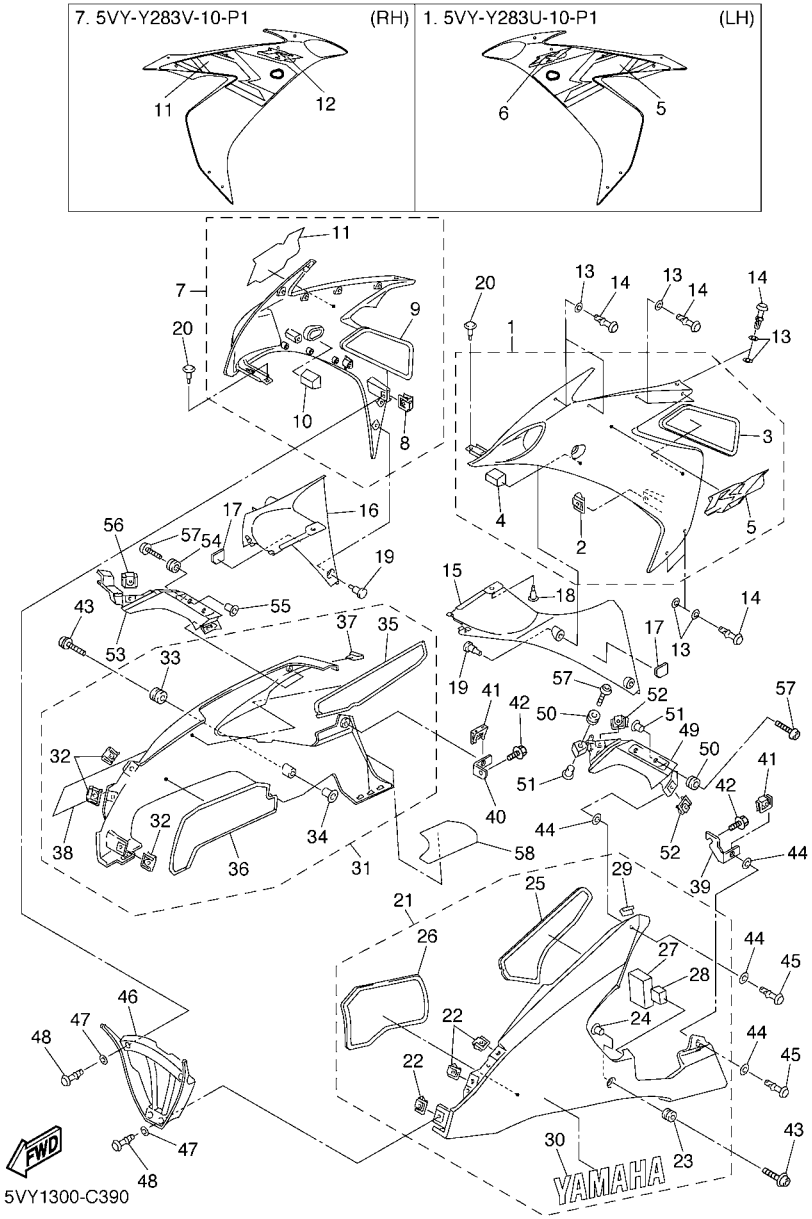

FIG. 39 COWLING 2

REF. NO.	PART NO.	DESCRIPTION	5VY4	5VY5	5VY6			REMARKS
39	5VY–2836A–00	BRACKET 1	1	1	1			
40	5VY–2836E–00	BRACKET 2	1	1	1			
41	5PW–2177L–00	PLATE, SPRING	2	2	2			
42	90109–06056	BOLT	2	2	2			
43	90149–06302	SCREW	2	2	2			
44	2TK–21757–00	WASHER, SPECIAL 1	8	8	8			
45	5PW–28386–00	HEAD	4	4	4			
46	5VY–2836M–00	PANEL, INNER 3	1	1	1			
47	2TK–21757–00	WASHER, SPECIAL 1	4	4	4			
48	5PW–28386–00	HEAD	4	4	4			
49	5VY–2117V–00	COVER 7	1	1	1			
50	90480–12596	GROMMET	3	3	3			
51	90387–065J6	COLLAR	3	3	3			
52	5PW–2177L–00	PLATE, SPRING	2	2	2			
53	5VY–2117W–00	COVER 8	1	1	1			
54	90480–12596	GROMMET	3	3	3			
55	90387–065J6	COLLAR	3	3	3			
56	5PW–2177L–00	PLATE, SPRING	2	2	2			
57	90111–06030	BOLT	6	6	6			
58	5VY–2848R–00	SEAT 7	1	1	1			

FIG. 40 GENERATOR

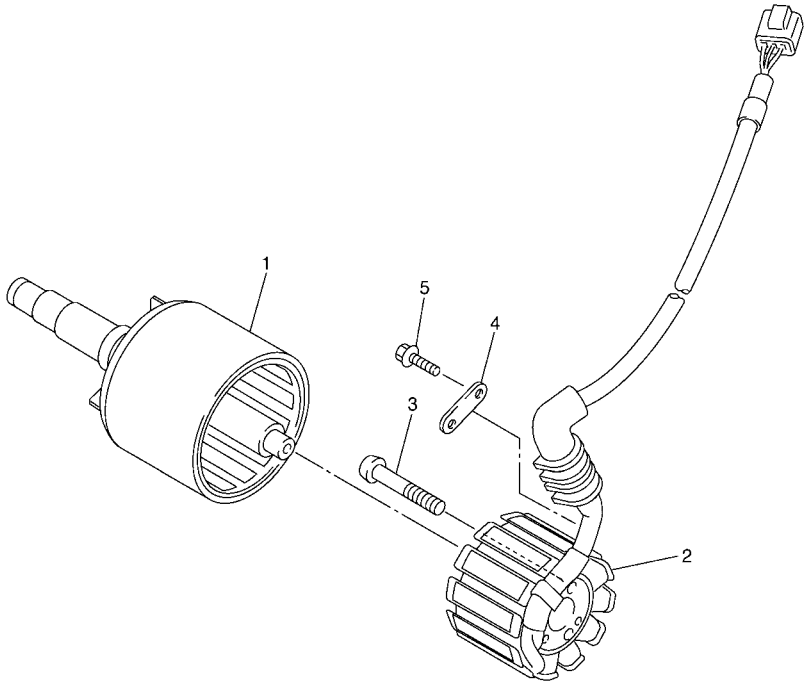

5VY1300-C400

REF. NO.	PART NO.	DESCRIPTION	5VY4	5VY5	5VY6			REMARKS
1	5VY–81450–00	ROTOR ASSY	1	1	1			
2	5VY–81410–00	STATOR ASSY	1	1	1			
3	90149–06035	SCREW	3	3	3			
4	5VY–15191–00	PLATE	1	1	1			
5	90105–06050	BOLT, FLANGE	1	1	1			

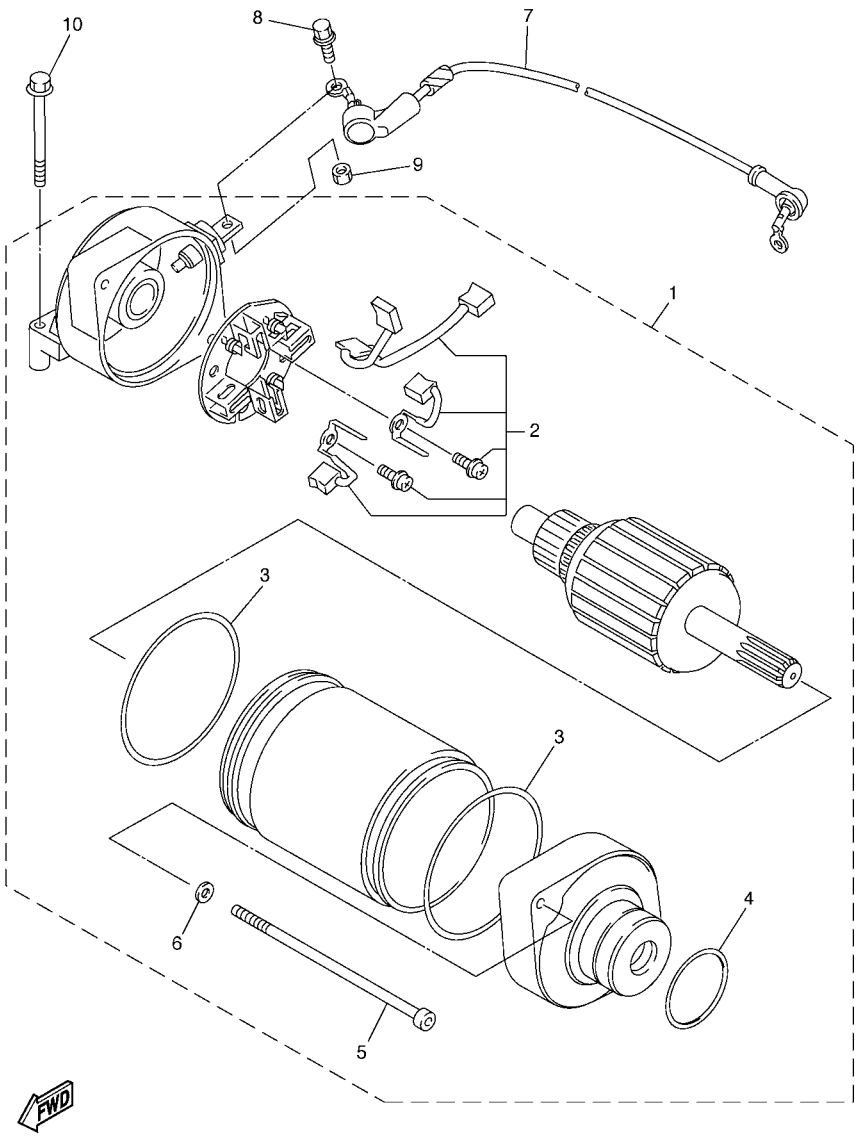

5VY1300-C410

FIG. 41 STARTING MOTOR

REF. NO.	PART NO.	DESCRIPTION	5VY4	5VY5	5VY6			REMARKS
1	5VY–81890–00	MOTOR ASSY	1	1	1			
2	5PW–81801–00	.BRUSH SET	1	1	1			
3	93210–55669	.O-RING	2	2	2			
4	93210–25711	.O-RING	1	1	1			
5	5PW–81846–00	.SCREW	2	2	2			
6	5PW–8181L–00	.WASHER, PLAIN	2	2	2			
7	5VY–8183G–00	CORD COMP.	1	1	1			
8	5PW–81828–00	BOLT 2	1	1	1			
9	95380–05700	NUT	1	1	1			
10	95027–06040	BOLT, FLANGE	2	2	2			

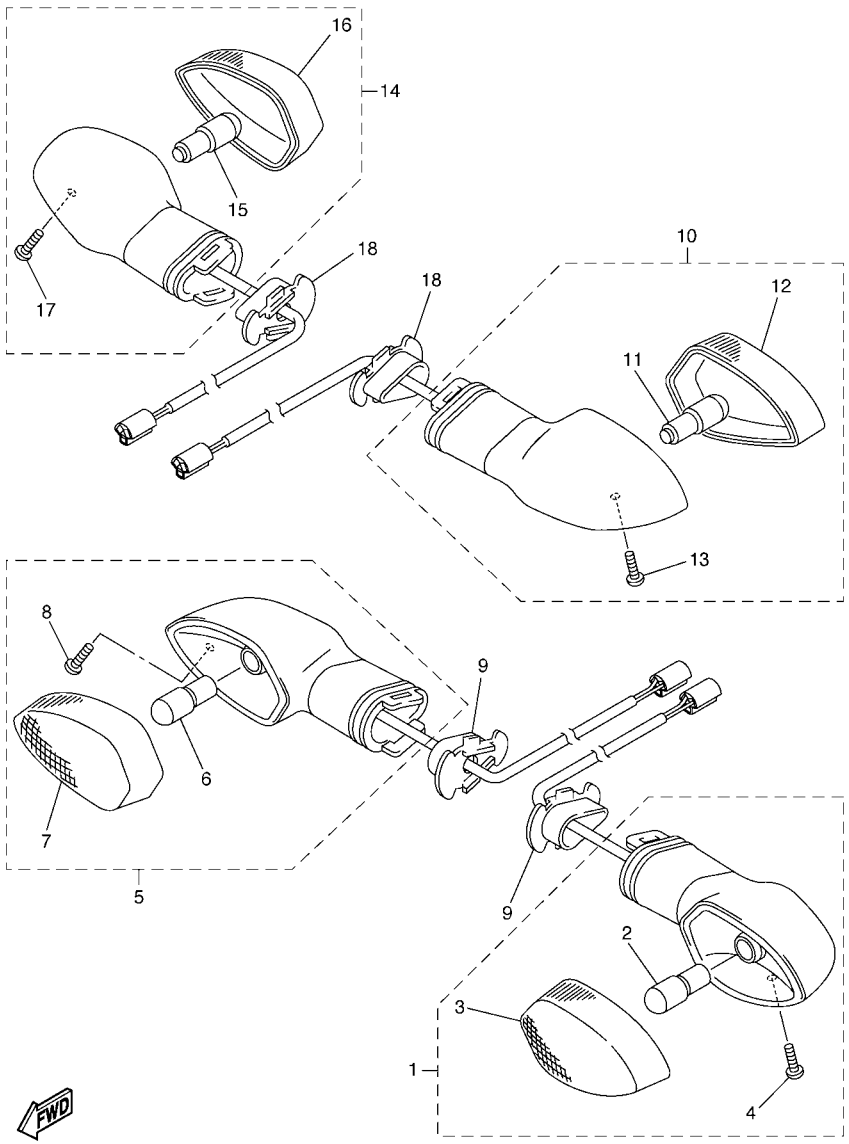

FIG. 42 FLASHER LIGHT

REF. NO.	PART NO.	DESCRIPTION	5VY4	5VY5	5VY6			REMARKS
1	5PW–83310–10	FRONT FLASHER LIGHT ASSY 1	1	1	1			
2	5GJ–83331–00	.BULB, FLASHER(12V-21/5W T20)	1	1	1			
3	5PW–8333A–10	.LENS COMP	1	1	1			
4	97706–04012	.SCREW, TAPPING	1	1	1			
5	5PW–83320–10	FRONT FLASHER LIGHT ASSY 2	1	1	1			
6	5GJ–83331–00	.BULB, FLASHER(12V-21/5W T20)	1	1	1			
7	5PW–8334A–10	.LENS COMP	1	1	1			
8	97706–04012	.SCREW, TAPPING	1	1	1			
9	5PW–83318–00	STAY, FLASHER 1	2	2	2			
10	5PW–83330–10	REAR FLASHER LIGHT ASSY 1	1	1	1			
11	5PW–83331–00	.BULB (12V-21/5W T20)	1	1	1			
12	5PW–8334A–10	.LENS COMP	1	1	1			
13	97706–04012	.SCREW, TAPPING	1	1	1			
14	5PW–83340–10	FLASHER LIGHT ASSY 2	1	1	1			
15	5PW–83331–00	.BULB (12V-21/5W T20)	1	1	1			
16	5PW–8333A–10	.LENS COMP	1	1	1			
17	97706–04012	.SCREW, TAPPING	1	1	1			
18	5PW–83318–00	STAY, FLASHER 1	2	2	2			

FIG. 43 METER

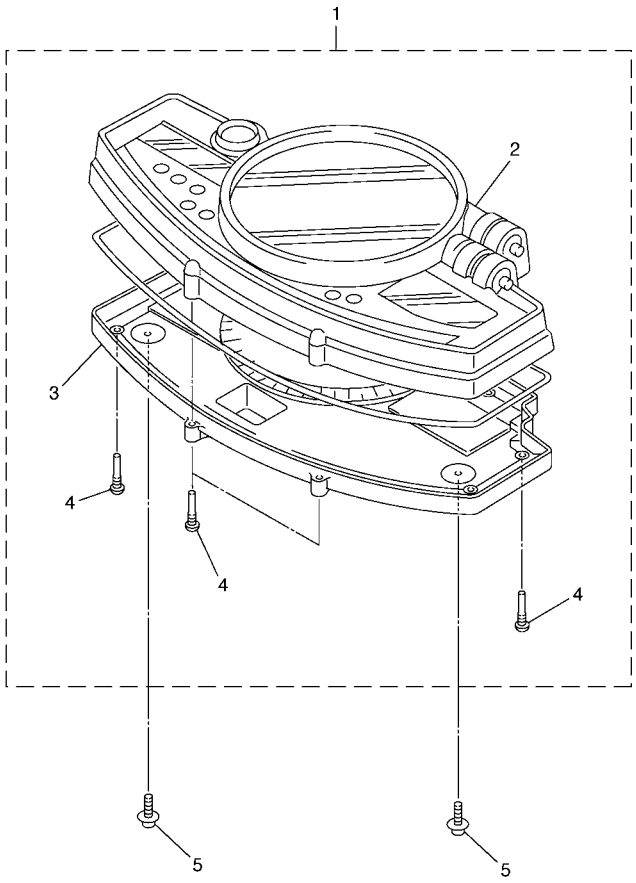

5VY1300-C430

REF. NO.	PART NO.	DESCRIPTION	5VY4	5VY5	5VY6			REMARKS
1	5VY–83500–20	SPEEDOMETER ASSY (MPH)	1	1				
	5VY–83500–30	SPEEDOMETER ASSY (KM/H)			1			
2	5VY–8353E–00	.CASE, METER UPPER	1	1	1			
3	5VY–83572–00	.CASE, SPEEDOMETER LOWER	1	1	1			
4	5PW–8352S–00	.SCREW, PANEL FTTING	11	11	11			
5	90160–05006	SCREW, ROUND TAPPING	3	3	3			

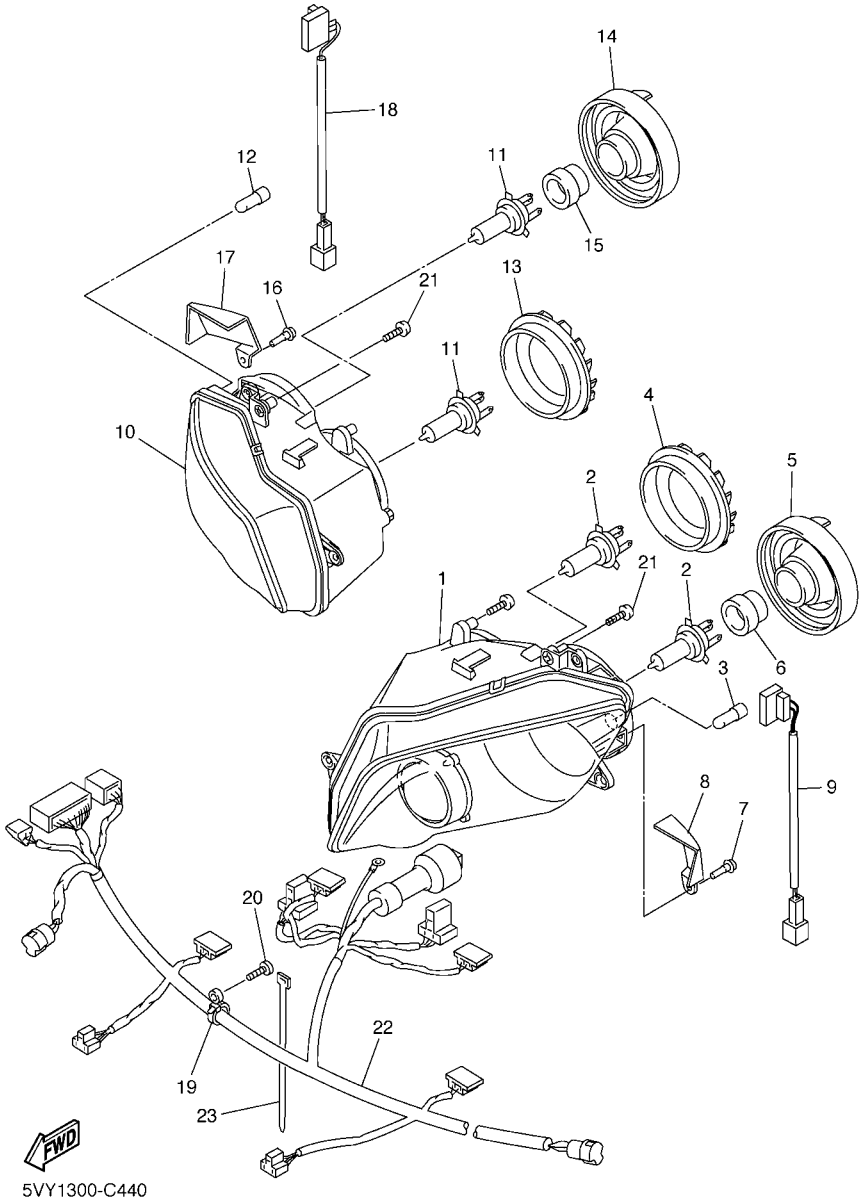

FIG. 44 HEADLIGHT

REF. NO.	PART NO.	DESCRIPTION	5VY4	5VY5	5VY6			REMARKS
1	5VY–84303–40	HEADLIGHT UNIT ASSY	1	1	1			
2	4SV–84314–00	BULB (12V-55W)	2	2	2			(H7)HALOGEN
3	4SV–84347–00	BULB (12V-5W)	1	1	1			
4	5SL–84397–00	COVER, SOCKET	1	1	1			
5	5GJ–84397–00	COVER, SOCKET	1	1	1			
6	4SV–84350–00	SOCKET CORD ASSY 2	1	1	1			
7	90269–06008	RIVET	1	1	1			
8	5VY–84196–00	COVER (L.H)	1	1	1			
9	5VY–84312–00	CORD ASSY	1	1	1			
10	5VY–84303–50	HEADLIGHT UNIT ASSY	1	1	1			
11	4SV–84314–00	BULB (12V-55W)	2	2	2			(H7)HALOGEN
12	4SV–84347–00	BULB (12V-5W)	1	1	1			
13	5SL–84397–00	COVER, SOCKET	1	1	1			
14	5GJ–84397–00	COVER, SOCKET	1	1	1			
15	4SV–84350–00	SOCKET CORD ASSY 2	1	1	1			
16	90269–06008	RIVET	1	1	1			
17	5VY–84396–00	COVER (R.H)	1	1	1			
18	5VY–84312–00	CORD ASSY	1	1	1			
19	90464–47001	CLAMP	1	1	1			
20	97707–50016	SCREW, TAPPING	1	1	1			
21	90160–05006	SCREW, ROUND TAPPING	6	6	6			
22	5VY–84359–10	CORD, HEADLIGHT	1	1	1			
23	90464–15195	CLAMP	1	1	1			

FIG. 45 TAILLIGHT

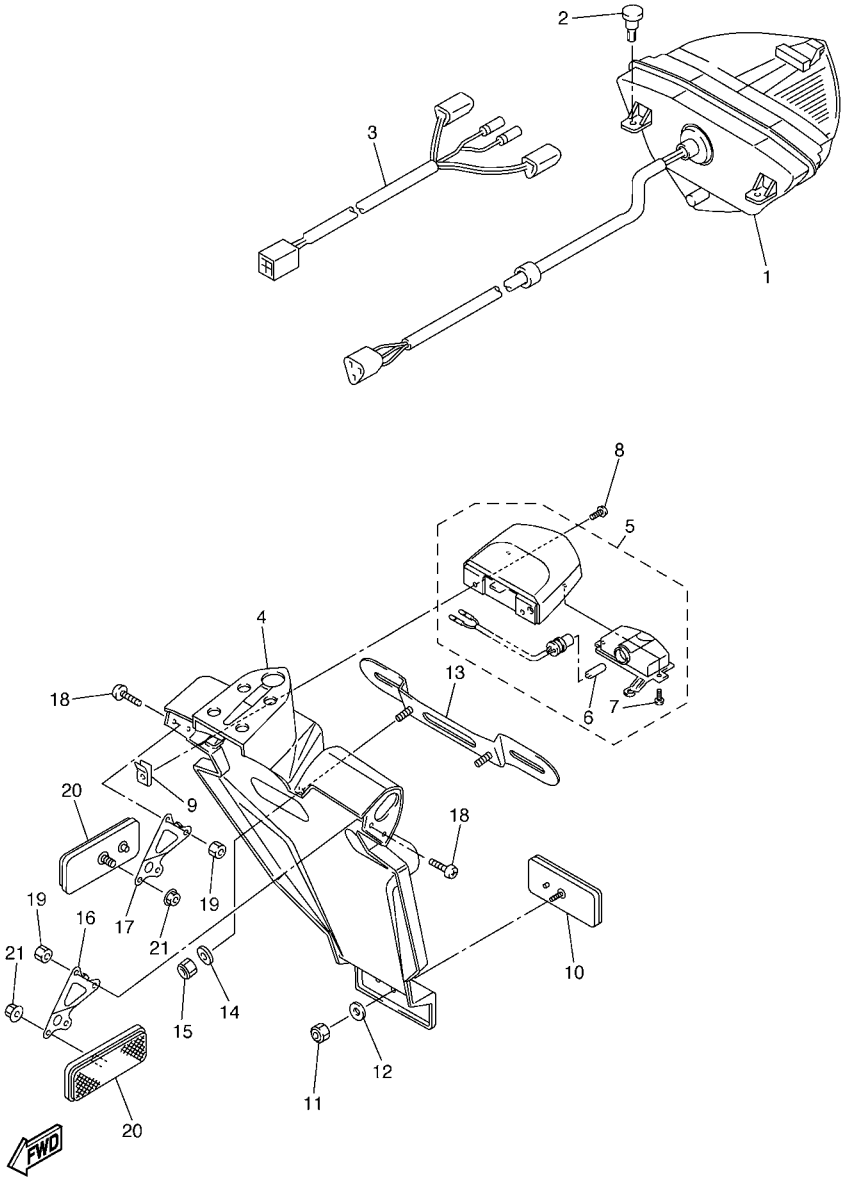

REF. NO.	PART NO.	DESCRIPTION	5VY4	5VY5	5VY6			REMARKS
1	5VY–84710–10	TAILLIGHT UNIT ASSY	1	1	1			
2	90269–06081	RIVET	2	2	2			
3	5PW–84717–00	CORD, TAILLIGHT	1	1	1			
4	5VY–21629–10	GUARD, MUD	1	1	1			
5	5VY–84745–00	LICENCE LIGHT UNIT ASSY	1	1	1			
6	4HC–84744–00	.BULB (12V-5W)	1	1	1			
7	97706–04012	.SCREW, TAPPING	2	2	2			
8	5VY–84726–00	SCREW	2	2	2			
9	4KB–84117–00	NUT	2	2	2			
10	3Y6–85130–02	REAR REFLECTOR ASSY	1	1	1			
11	95607–05100	NUT, U	1	1	1			
12	90201–05725	WASHER, PLATE	1	1	1			
13	5MT–84751–00	BRACKET, LICENSE	1	1	1			
14	90201–06057	WASHER, PLATE	2	2	2			
15	95607–06100	NUT, U	2	2	2			
16	5VY–21688–00	BRACKET, REAR STAY	1	1	1			
17	5VY–21689–00	BRACKET, REAR STAY 2	1	1	1			
18	90150–04041	SCREW, ROUND HEAD	4	4	4			
19	95607–04100	NUT, U	4	4	4			
20	3Y6–85130–02	REAR REFLECTOR ASSY	2	2	2			
21	95707–05500	NUT, FLANGE	2	2	2			

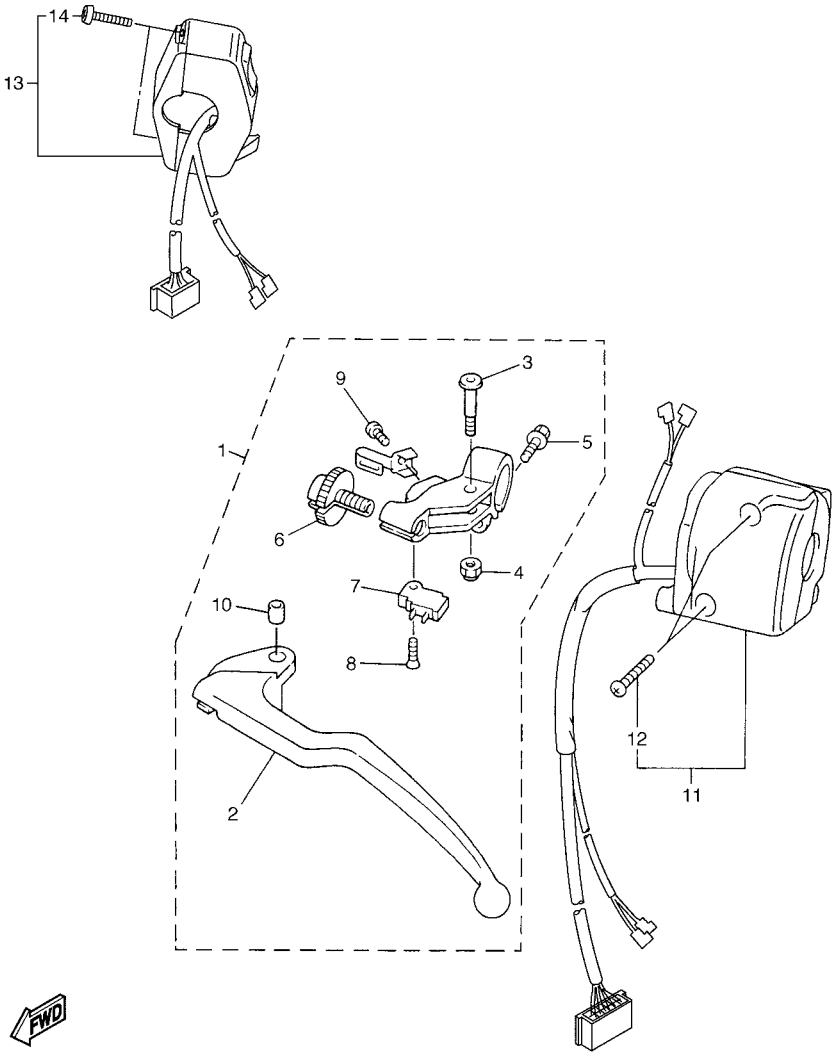

5VY4100-C460

FIG. 46 HANDLE SWITCH & LEVER

REF. NO.	PART NO.	DESCRIPTION	5VY4	5VY5	5VY6			REMARKS
1	4XV–82910–13	LEVER HOLDER ASSY (LEFT)	1	1	1			
2	4XV–83912–11	.LEVER 1	1	1	1			
3	4XV–83945–00	.BOLT, LEVER	1	1	1			
4	95607–06100	.NUT, U	1	1	1			
5	95027–06020	.BOLT, FLANGE	1	1	1			
6	5LV–83951–00	.BOLT, CABLE ADJUSTING	1	1	1			
7	4XV–82917–01	.SWITCH	1	1	1			
8	98707–03016	.SCREW, FLAT HEAD	1	1	1			
9	98507–04010	.SCREW, PAN HEAD	1	1	1			
10	5JJ–83913–00	.COLLAR, LEVER 1	1	1	1			
11	5VY–83973–00	SWITCH, HANDLE 3	1	1	1			
12	98507–05025	.SCREW, PAN HEAD	2	2	2			
13	5PW–83975–00	SWITCH, HANDLE 2	1	1	1			
14	98507–05022	.SCREW, PAN HEAD	2	2	2			

FIG. 47 ELECTRICAL 1

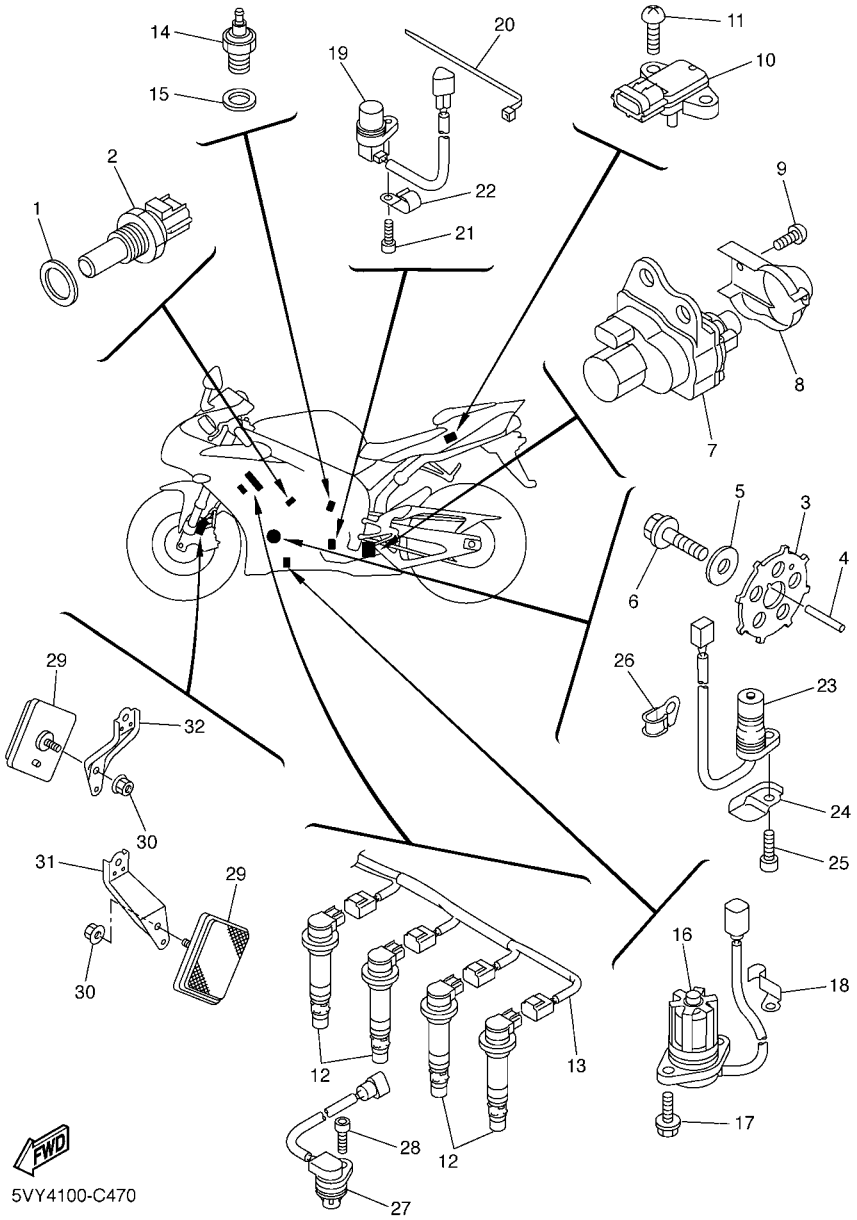

REF. NO.	PART NO.	DESCRIPTION	5VY4	5VY5	5VY6			REMARKS
1	90201–12790	WASHER, PLATE	1	1	1			
2	8CC–85790–01	THERMOSENSOR ASSY	1	1	1			
3	5VY–81673–00	ROTOR	1	1	1			
4	90282–03001	KEY, STRAIGHT	1	1	1			
5	90201–103U4	WASHER, PLATE	1	1	1			
6	90105–10290	BOLT, FLANGE	1	1	1			
7	5VY–85820–00	SERVO MOTOR ASSY	1	1	1			
8	5VY–85829–00	COVER, SERVO MOTOR	1	1	1			
9	97707–50514	SCREW, TAPPING	2	2	2			
10	5VX–82380–00	SENSOR, PRESSURE	1	1	1			
11	97707–50020	SCREW, TAPPING	2	2	2			
12	5VY–82310–00	IGNITION COIL ASSY	4	4	4			
13	5VY–82309–00	WIRE, SUB LEAD	1	1	1			
14	3GB–82540–01	NEUTRAL SWITCH ASSY	1	1	1			
15	90430–10148	GASKET	1	1	1			
16	5VY–85720–00	OIL LEVEL GAUGE ASSY	1	1	1			
17	95027–06016	BOLT, FLANGE	2	2	2			
18	90465–08013	CLAMP	1	1	1			
19	4XV–83755–01	SENSOR, SPEED	1	1	1			
20	90464–51001	CLAMP	1	1	1			
21	90110–06041	BOLT, HEXAGON SOCKET HEAD	1	1	1			
22	90465–08028	CLAMP	1	1	1			
23	5VY–81670–00	PICK-UP ASSY	1	1	1			
24	5VY–15589–00	PLATE, CLUTCH COVER	1	1	1			
25	90110–06041	BOLT, HEXAGON SOCKET HEAD	1	1	1			
26	90465–08191	CLAMP	1	1	1			
27	5VY–85896–00	SENSOR, CAM POSITION	1	1	1			

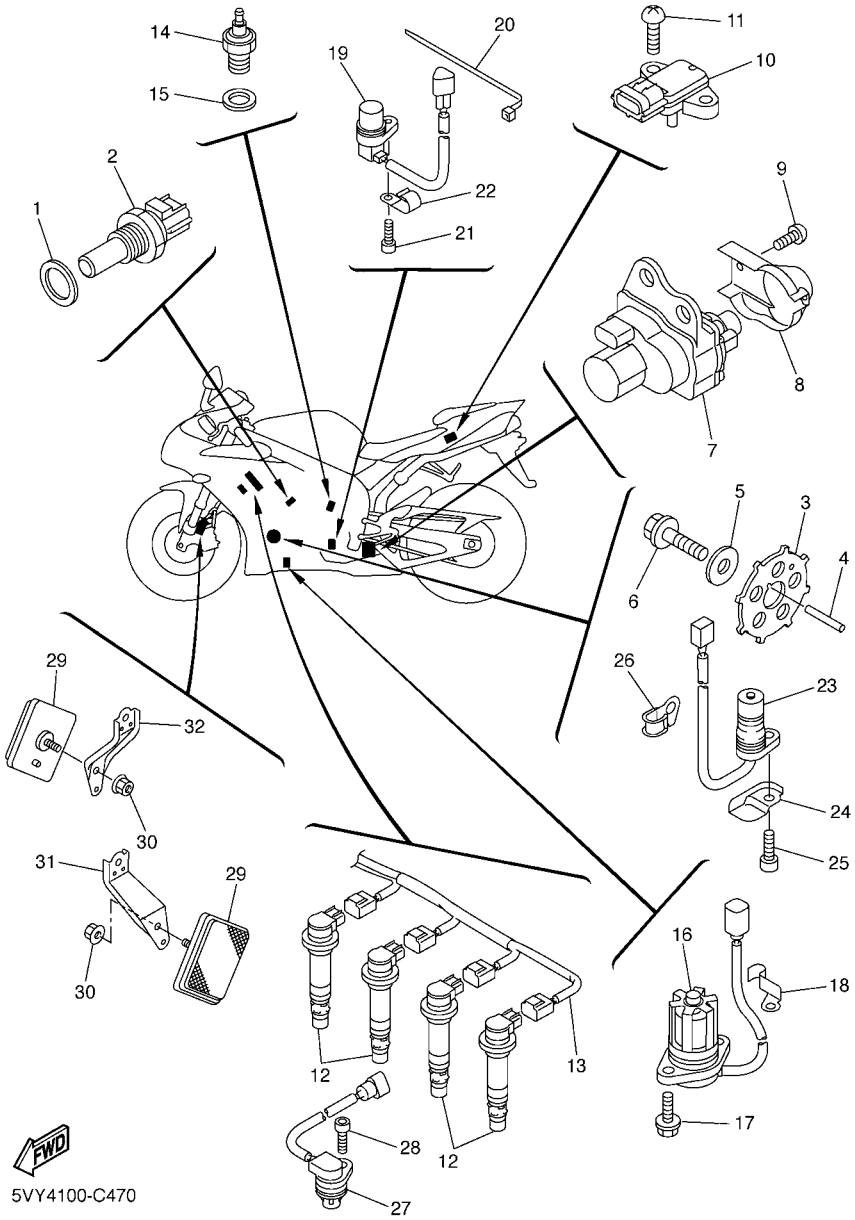

FIG. 47 ELECTRICAL 1

REF. NO.	PART NO.	DESCRIPTION	5VY4	5VY5	5VY6			REMARKS
28	90110–06117	BOLT, HEXAGON SOCKET HEAD	1	1	1			
29	20G–85110–00	REFLECTOR ASSY	2	2	2			
30	95707–05500	NUT, FLANGE	2	2	2			
31	5VY–85112–00	BRACKET, REFLECTOR 1	1	1	1			
32	5VY–85122–00	BRACKET, REFLECTOR 2	1	1	1			

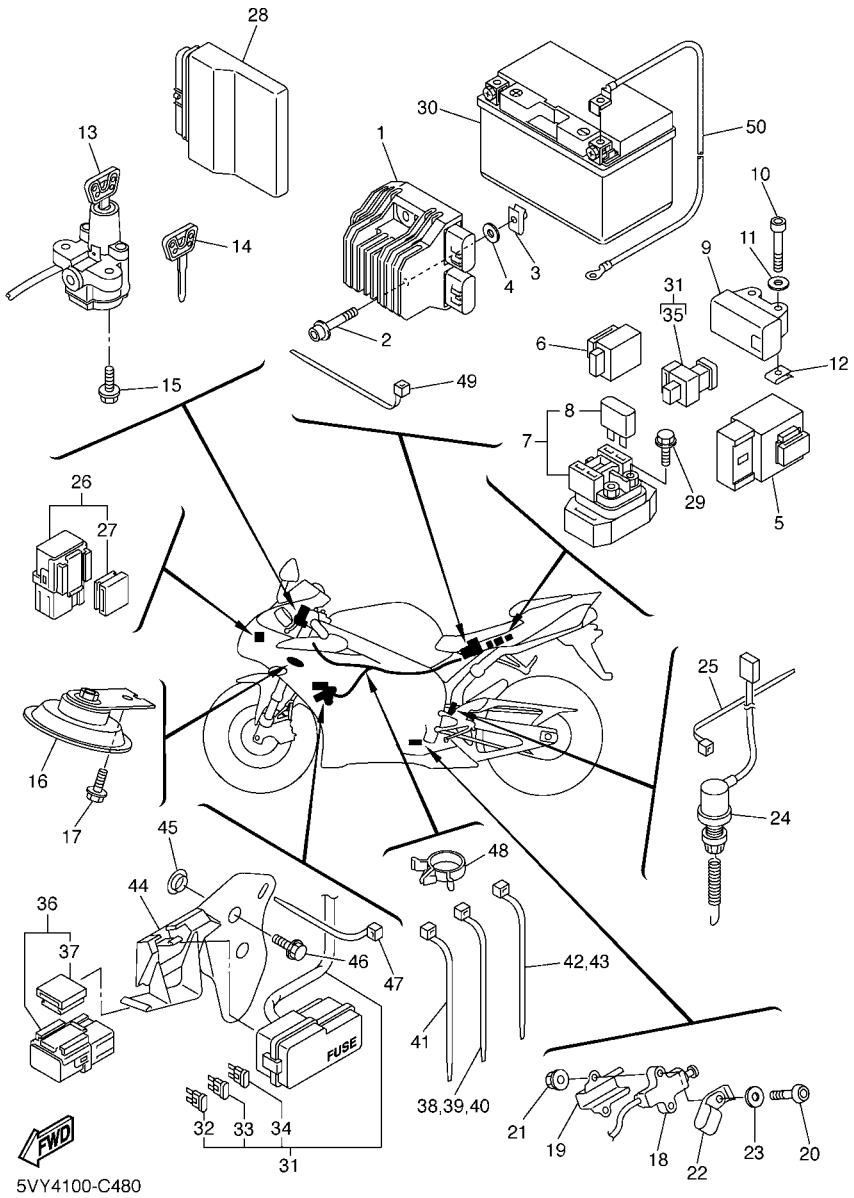

FIG. 48 ELECTRICAL 2

REF. NO.	PART NO.	DESCRIPTION	5VY4	5VY5	5VY6			REMARKS
1	5VY–81960–00	RECTIFIER & REGULATOR ASSY	1	1	1			
2	90110–06066	BOLT, HEXAGON SOCKET HEAD	2	2	2			
3	90183–06053	NUT, SPRING	1	1	1			
4	90202–05187	WASHER, PLATE	2	2	2			
5	5VK–81950–40	RELAY ASSY	1	1	1			
6	4MY–83350–01	FLASHER RELAY ASSY	1	1	1			
7	5JW–81940–00	STARTER RELAY ASSY	1	1	1			
8	36Y–82151–00	.FUSE (15A-BL)	2	2	2			
9	5PS–82576–01	EMERGENCY STOP SWITCH ASSY	1	1	1			
10	91317–04025	BOLT	2	2	2			
11	90201–047A2	WASHER, PLATE	2	2	2			
12	90183–04039	NUT, SPRING	2	2	2			
13	5VY–82501–10	MAIN SWITCH STEERING LOCK	1	1	1			
14	4BH–82511–09	BLANK KEY	1	1	1			AP
15	90109–080G5	BOLT	2	2	2			
16	4TH–83371–00	HORN	1	1	1			
17	95807–06012	BOLT, FLANGE	1	1	1			
18	5PX–82566–50	SWITCH, SIDE STAND	1	1	1			
19	5JJ–82388–00	PLATE	1	1	1			
20	92017–05030	BOLT, BUTTON HEAD	2	2	2			
21	95607–05200	NUT, U FLANGE	2	2	2			
22	90461–10002	CLAMP	1	1	1			
23	90201–057H5	WASHER, PLATE	1	1	1			
24	5PW–82530–00	STOP SWITCH ASSY	1	1	1			
25	5Y9–12491–00	CLAMP 1	1	1	1			
26	5JJ–81950–20	RELAY ASSY	2	2	2			
27	5JJ–81952–00	.HOLDER, RELAY	1	1	1			

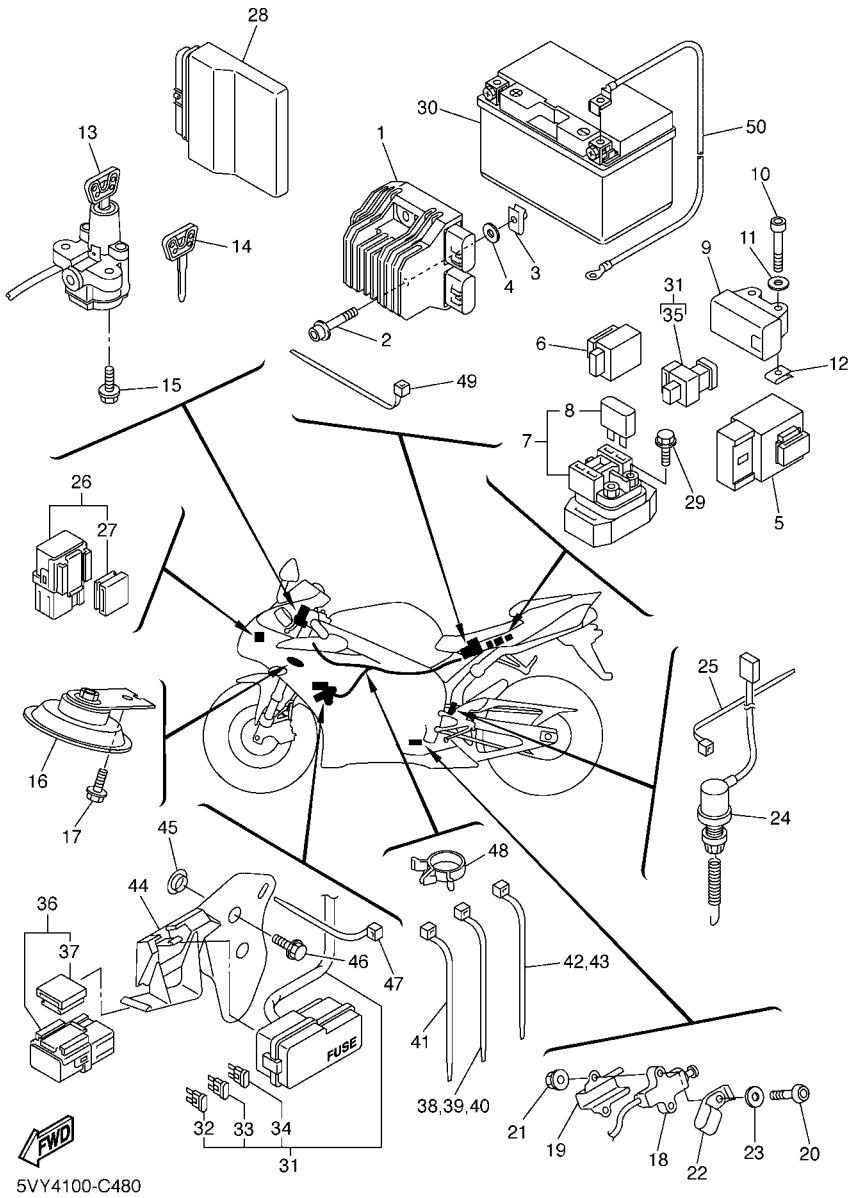

FIG. 48 ELECTRICAL 2

REF. NO.	PART NO.	DESCRIPTION	5VY4	5VY5	5VY6			REMARKS
28	5VY–8591A–20	ENGINE CONTROL UNIT ASSY	1		1			
	5VY–8591A–30	ENGINE CONTROL UNIT ASSY		1				
29	95027–06008	BOLT, FLANGE	2	2	2			
30	5VY–82100–00	BATTERY ASSY (YUASA YTZ10S)	1	1	1			
31	5VY–82590–10	WIRE HARNESS ASSY	1	1	1			
32	5JJ–82151–10	.FUSE (15A-BL)	4	4	4			
33	5JJ–82151–30	.FUSE (10A-BL)	3	3	3			
34	5JJ–82151–70	.FUSE (25A-BL)	2	2	2			
35	5JW–82151–10	.FUSE (50A)	1	1	1			
36	5EA–81950–20	RELAY ASSY	1	1	1			
37	5EA–81952–00	.HOLDER, RELAY	1	1	1			
38	90464–15195	CLAMP	1	1	1			
39	90464–15195	CLAMP	1	1	1			
40	90464–15195	CLAMP	1	1	1			
41	90464–13073	CLAMP	1	1	1			
42	1UA–82591–00	BAND	1	1	1			
43	1UA–82591–00	BAND	1	1	1			
44	5VY–82171–00	STAY, FUSE BOX	1	1	1			
45	90387–06040	COLLAR	2	2	2			
46	90119–06114	BOLT, WITH WASHER	2	2	2			
47	90464–13077	CLAMP	1	1	1			
48	90464–15157	CLAMP	1	1	1			
49	90464–13073	CLAMP	2	2	2			
50	5VY–82116–00	WIRE, MINUS LEAD	1	1	1			

NUMERICAL INDEX

PART NO.	GRID NO.
5VY–11101–00	B – 2
4KG–1111G–00	B – 3
5VY–11133–10	B – 2
5VY–11134–10	B – 2
5VY–11165–00	C – 11
5VY–11181–00	B – 2
5VY–11191–00	B – 2
5VY–11193–00	B – 2
214–11198–01	B – 14
5VY–11311–00	B – 4
5VY–1133E–00	C – 7
5VY–1133F–00	C – 8
5VY–11351–00	B – 4
5VY–11411–01	B – 5
5VY–11416–00	B – 5
5VY–11416–10	B – 5
5VY–11416–20	B – 5
5VY–11416–30	B – 5
5VY–11416–A0	B – 5
5VY–11445–00	C – 12
5VY–11478–00	C – 12
5VY–11537–00	C – 12
5VY–11549–00	B – 5
5VY–11603–00	B – 5
5VY–11631–01	B – 5
5VY–11633–00	B – 5
5VY–11650–01	B – 5
5VY–11654–01	B – 5
5VY–11656–00	B – 5
5VY–11656–10	B – 5
5VY–11656–20	B – 5
5VY–11656–30	B – 5
5VY–12111–00	B – 6
5VY–12112–00	B – 6
5VY–12113–00	B – 6
5VY–12114–00	B – 6
5NL–12116–00	B – 6
5VY–12117–00	B – 6
1HX–12118–00	B – 6
1WG–12118–00	B – 6
4SV–12119–00	B – 6
4TV–12119–00	B – 6
5VY–12121–00	B – 6
3GM–12126–00	B – 6
5VY–12127–00	B – 6
3FV–12153–09	B – 7
3LN–12153–09	B – 7
3FV–12153–20	B – 7

PART NO.	GRID NO.
3LN–12153–20	B – 7
3FV–12153–30	B – 7
3LN–12153–30	B – 7
1HX–12168–00	B – 6
1HX–12168–20	B – 6
1HX–12168–40	B – 6
1HX–12168–60	B – 6
1HX–12168–80	B – 6
1HX–12168–A0	B – 6
1HX–12168–F0	B – 6
1HX–12168–H1	B – 6
1HX–12168–K1	B – 6
1HX–12168–M1	B – 6
1HX–12168–R1	B – 6
1HX–12168–U1	B – 6
1HX–12168–W1	B – 6
1HX–12168–Y1	B – 6
1HX–12169–11	B – 7
1HX–12169–31	B – 7
1HX–12169–50	B – 7
1HX–12169–70	B – 7
1HX–12169–90	B – 7
1HX–12169–E0	B – 7
1HX–12169–G0	B – 7
1HX–12169–J0	B – 7
1HX–12169–L0	B – 7
1HX–12169–N0	B – 7
1HX–12169–T0	B – 7
5VY–12170–00	B – 8
5VY–12176–00	B – 8
5VY–12180–00	B – 8
5VY–12210–00	B – 8
5BE–12241–00	B – 2
5VY–12251–00	B – 8
5VY–12252–00	B – 8
5VY–12277–00	E – 2
5VY–12405–00	B – 12
5VY–12405–10	B – 12
5VY–12410–00	B – 11
5LP–12411–00	B – 11
5VY–12421–00	B – 9
5VY–12422–00	B – 9
11H–12438–10	B – 9
4XV–12439–00	B – 9
5VY–1243A–00	B – 11
5VY–1243E–00	B – 11
5VY–1243F–00	B – 11
5VY–12443–00	C – 11

PART NO.	GRID NO.
5VY–1244G–00	B – 11
5VY–12450–00	B – 9
5VY–12456–00	B – 9
5VY–12461–00	B – 12
5SL–12462–00	B – 12
5VY–12469–00	B – 9
5GV–1246A–00	B – 11
5GV–1246E–00	B – 12
5VY–12481–00	B – 10
5VY–12483–00	B – 11
5VY–12484–00	B – 10
4XV–12485–00	B – 9
5VY–12485–00	B – 11
5Y9–12491–00	G – 6
5VY–12551–00	B – 12
5VY–12552–00	B – 11
5VY–12576–00	B – 9
5VY–12577–00	B – 11
5VY–12578–00	B – 11
5VY–12579–00	B – 11
5VY–12588–00	B – 10
5VY–12589–01	B – 12
5VY–12637–00	B – 9
5GJ–12675–00	B – 12
5VY–12682–00	C – 2
5EB–12822–00	B – 14
5VY–13117–00	B – 13
5VY–13161–00	B – 14
5VY–1316E–00	B – 13
5VY–13310–00	B – 9
5VY–13336–00	B – 9
5VY–13354–00	C – 14
5VY–13355–00	B – 9
5VY–13410–00	B – 13
5VY–13414–01	B – 14
5VY–13416–00	B – 13
5VY–13417–00	B – 14
5VY–13418–00	C – 9
5GH–13440–00	B – 14
5VY–13470–00	B – 14
5JW–13473–00	B – 14
5EB–13475–00	B – 14
5VY–13490–00	B – 14
5VY–13543–00	C – 4
5VY–13595–00	B – 15
5VY–13596–00	B – 15
5VY–13597–00	B – 15
5VY–13598–00	B – 15

PART NO.	GRID NO.
5VY–13750–00	C – 3
5VY–13750–10	C – 3
5VY–13761–00	C – 4
5VY–13898–00	B – 13
5VY–13906–00	C – 3
5PW–13907–01	E – 4
5VY–13971–00	C – 4
5VY–13972–00	C – 4
5PW–14103–00	C – 4
5JW–14104–00	C – 4
5PW–1410F–00	C – 3
4KM–14137–00	C – 3
5PS–14147–00	C – 4
5VY–14171–00	C – 3
5VY–14204–00	C – 3
8CC–14216–10	C – 4
5PW–14251–00	C – 3
5VY–14348–00	C – 4
5PW–14349–00	C – 3
5SL–14349–00	C – 4
5FL–14349–10	C – 3
5JW–14396–00	C – 3
5VY–1440B–00	B – 15
5VY–14411–00	B – 15
5VY–14413–00	C – 4
5VY–14419–00	B – 15
5VY–14421–00	B – 15
5VY–14425–00	C – 2
31A–14435–00	B – 15
5VY–14435–00	B – 15
5VY–1443J–00	E – 6
5VY–14451–00	B – 15
5VY–14452–00	B – 15
5VY–14457–00	B – 15
5VY–14462–00	B – 15
5VY–14465–00	C – 4
5VY–14466–00	C – 4
5VY–14467–00	B – 15
5VY–14498–00	B – 15
5JW–14589–00	C – 4
5VY–14602–00	C – 6
5VY–14610–00	C – 6
4FM–14613–00	C – 6
5VY–14623–00	C – 6
5VY–14638–00	C – 6
5VY–14643–00	C – 6
5VY–14648–00	C – 6
5VY–14674–00	C – 6

PART NO.	GRID NO.
5VY–14710–10	C – 6
5VY–14714–00	C – 6
5JJ–14715–00	C – 6
5VY–14715–00	C – 6
5VY–14718–01–P0	C – 8
5VY–14720–10	C – 7
5VY–14728–01–P0	C – 8
5VY–14740–00	C – 6
5VY–14747–00	C – 7
5VY–14755–00	C – 6
5VY–14757–00	C – 8
	D – 8
5VY–1475P–00	C – 8
5VY–1476P–00	C – 8
5VY–1477P–00	C – 8
5VY–1478P–00	C – 8
5VY–14811–00	C – 6
5VY–14821–00	C – 6
5VY–14826–00	C – 6
5VY–1482K–00	B – 2
5VY–14840–00	C – 5
5VY–14856–00	C – 6
5VY–14862–00	B – 15
5VY–14865–00	C – 6
5VY–14867–00	C – 6
5VY–14881–00	C – 5
5VY–14882–00	C – 5
5VY–14883–00	C – 5
5SL–14890–00	B – 2
5VY–14899–00	B – 2
5VY–14905–00	C – 4
5DM–14936–00	C – 4
22U–14952–00	C – 3
5PS–14987–00	C – 3
5VY–15100–00	C – 9
5VY–15113–00	C – 11
5EB–15155–00	C – 9
5VY–15163–00	C – 15
5VY–15164–00	C – 10
36Y–15189–00	C – 11
4H7–15189–00	C – 11
5PX–15189–00	C – 10
5VY–15191–00	F – 11
5VY–15316–00	C – 9
5PW–15361–00	C – 9
5VY–15362–00	C – 10
1UF–15379–00	D – 8
5VY–15393–00	B – 15

PART NO.	GRID NO.
5VY–15411–00	C – 10
5VY–15413–00	C – 11
5VY–15416–00	C – 10
5VY–15418–00	C – 10
5VY–15421–00	C – 10
5VY–15431–00	C – 11
5VY–15441–00	C – 11
5VY–15451–00	C – 10
5VY–15456–00	C – 11
5VY–15461–00	C – 10
5VY–15462–00	C – 11
5VY–15499–00	C – 10
5VY–15515–00	C – 12
5VY–15517–00	C – 12
5VY–15521–00	C – 12
5VY–15542–00	C – 10
5VY–15570–00	C – 12
5VY–15586–00	C – 12
5VY–15589–00	G – 4
5VY–16150–00	C – 13
5VY–16154–00	C – 13
5VY–16155–00	C – 12
5VY–16164–00	C – 14
5VY–16181–00	C – 14
5VY–16321–00	C – 13
5VY–16325–00	C – 13
5VY–16330–00	C – 13
5VY–16331–00	C – 13
5VY–16340–00	C – 13
132–16346–00	D – 4
5VY–16351–00	C – 13
4XV–16356–01	C – 13
5VY–16370–00	C – 13
5VY–16382–00	C – 13
5VY–16383–00	C – 13
5VY–16384–00	C – 13
4X7–16385–00	C – 13
5VY–17121–00	C – 15
5VY–17131–00	C – 15
5VY–17151–00	C – 15
5VY–17161–00	C – 15
5VY–17211–00	D – 2
5VY–17221–10	C – 15
5VY–17231–00	D – 2
5VY–17241–00	C – 15
5VY–17251–00	D – 2
5VY–17261–10	C – 15
5VY–17402–00	C – 15

NUMERICAL INDEX

PART NO.	GRID NO.
5VY–17411–00	C – 15
5VY–17442–00	C – 15
5VY–17446–00	C – 15
3CV–17460–00	D – 2
5VY–18101–00	D – 4
5VY–18110–00	D – 4
5VY–18112–00	D – 4
5EB–18113–00	D – 4
5VY–18115–00	D – 4
5LV–18116–00	D – 4
5VY–18127–00	D – 4
5VY–18140–00	D – 4
5VY–18144–00	D – 4
4XV–18154–00	D – 4
5VY–18511–01	D – 3
5VY–18512–01	D – 3
5VY–18513–01	D – 3
5VY–18531–00	D – 3
5VY–18535–00	D – 3
5VY–18536–00	D – 3
5VY–18540–00	D – 3
136–18542–00	D – 3
5VY–18562–00	D – 3
5VY–2110M–00	D – 6
5VY–2110M–10	D – 6
5VY–21110–00	D – 5
5VY–21110–10	D – 5
5VY–21131–00	D – 6
5VY–2116J–00	D – 5
5VY–2117K–01	E – 8
5VY–2117R–00	D – 6
5VY–2117V–00	F – 10
5VY–2117W–00	F – 10
5VY–21190–00	D – 5
5VY–21268–00	D – 5
5VY–21269–00	D – 5
5VY–2131P–00	D – 6
4XV–21376–00	D – 7
5VY–21414–00	D – 5
5VY–21424–00	D – 5
5VY–21435–00	D – 5
5VY–2144G–00	F – 4
5EB–21495–00	D – 5
5PW–21511–00–P1	D – 7
5PW–21511–00–P3	D – 7
5PW–21511–00–P5	D – 7
5JJ–2153E–00	F – 9
5JJ–2153E–10	F – 9

PART NO.	GRID NO.
5JJ–2153E–20	F – 9
5VY–21611–00–P0	D – 7
5VY–21611–00–P1	D – 7
5VY–21611–00–P3	D – 7
5VY–21617–00	D – 7
5VY–2161G–00	D – 8
5VY–21629–10	G – 2
5VY–21639–00	D – 8
5VY–2163A–00	D – 8
5VY–2163E–00	D – 8
5VY–2164F–00	D – 8
5VY–2164G–00	D – 7
5VY–2164K–00	D – 8
5VY–2164L–00	D – 8
5VY–21650–00	D – 13
5VY–21652–00	D – 8
5VY–21669–00	D – 7
5VY–21688–00	G – 2
5VY–21689–00	G – 2
5VY–21710–00–P0	D – 10
5VY–21710–00–P1	D – 10
5VY–21710–00–P3	D – 10
1UJ–21717–00	D – 10
5VY–2171A–00–P0	E – 5
5VY–2171A–00–P1	E – 5
5VY–2171A–00–P3	E – 5
1FK–2171H–00	F – 7
5VY–2172E–00	D – 10
5VY–2172P–00	D – 10
5PW–21732–00	D – 8
	D – 10
5VY–21732–00	D – 8
1JK–21735–00	D – 10
5VY–21735–00	D – 10
5VY–2173P–00	D – 10
5VY–21746–00	D – 6
5VY–21747–00	D – 10
5PW–2174X–00	D – 10
5VY–2174X–00	D – 6
5VY–2174Y–00	D – 6
2TK–21757–00	F – 8
5VY–2176V–00	E – 8
5PW–2177L–00	F – 6
	F – 8
5VY–2179R–00	C – 2
5VY–2179V–00	C – 2
26H–21828–00	D – 10
5VY–21843–00	D – 10

PART NO.	GRID NO.
5VY–21871–00	D – 10
5VY–21875–00	D – 10
5VY–21880–00	C – 7
5VY–21890–00	C – 7
5VY–22110–00	D – 12
5VY–22128–00	D – 12
5VY–22128–10	D – 12
5VY–22141–00	D – 13
5VY–22151–00	D – 12
5VY–2217A–00	D – 12
5VY–2217M–00	D – 12
5VY–22184–00	D – 12
5VY–22210–10	D – 14
5VY–22210–20	D – 14
5SL–22219–00	D – 14
5VY–22311–00	D – 12
5VY–22873–00	D – 12
5VY–23102–10	E – 2
5VY–23103–10	E – 2
5VY–23110–00	E – 2
5VY–23111–00	E – 2
5VY–23118–00	E – 2
5VY–23120–00	E – 2
5VY–23136–10	E – 2
5VY–23141–00	E – 2
4PU–23144–00	E – 2
4PU–23145–01	E – 2
5PW–23146–00	E – 2
3XJ–23147–L0	E – 2
4V4–23153–L0	E – 2
509–23158–L0	E – 2
5VY–23170–00	E – 2
5UX–23181–00	E – 2
5VY–23340–00	E – 3
3LC–23357–00	E – 2
5VY–23377–00	E – 15
5VY–23389–00	E – 14
4XV–23415–01	D – 15
4XV–23418–00	D – 15
4XV–2341B–00	D – 15
4XV–23434–00	E – 14
5VY–23435–10	D – 15
3FV–23462–00	D – 15
2H9–23469–00	E – 14
5VY–23490–00	E – 14
5VY–23495–00	E – 14
5VY–23808–00	D – 15
5VY–24117–00	E – 5

PART NO.	GRID NO.
5VY–24118–00	E – 5
5PW–2411J–01	E – 6
5VY–24129–00	E – 6
5VY–24139–00	E – 6
5PW–2413B–00	E – 6
5VY–2413Y–00	E – 4
5VY–24145–00	E – 5
5PW–2414H–00	E – 6
5VY–2414H–00	E – 6
5PW–2414J–00	E – 6
5VY–2414J–00	E – 5
5VY–2414K–00	E – 6
5VY–2414N–00	E – 6
5VY–2414P–00	E – 6
5VY–2414R–00	E – 6
5VY–24170–00	E – 6
5RB–24180–00	E – 6
5VY–24181–00	E – 4
5SL–24183–00	E – 4
5VY–24183–00	E – 4
5VY–24191–00	E – 4
5PW–24192–00	E – 5
5VY–24192–00	E – 4
5VY–2419F–00	E – 6
5VY–24216–00	E – 6
5VY–24240–00	E – 4
5VY–24312–00	E – 7
5VY–24313–00	E – 6
5VY–24314–00	E – 6
5VY–24315–00	E – 5
5VY–24316–00	E – 5
5VY–24317–00	E – 5
68V–24376–00	C – 3
5JW–24486–00	E – 5
5VY–24491–00	E – 4
5JJ–24602–00	E – 4
5VY–2470F–00	E – 8
5VY–24710–00	E – 8
5SL–24723–00	E – 8
5VY–24729–00	E – 8
5VY–24750–00	E – 8
5VY–24751–00	E – 8
5VY–24780–00	E – 8
5VY–2478E–00	E – 8
5VY–24792–00	E – 8
4XV–25117–00	E – 9
4XV–25118–00	E – 9
5VY–25168–00–98	E – 9

PART NO.	GRID NO.
5PW–25181–00	E – 9
4XV–25186–00	E – 9
5PW–25188–00	E – 9
5PW–25317–00	E – 11
5VY–25338–00–98	E – 11
5VX–25364–00	E – 11
5SL–25366–00	E – 11
5PW–25367–00	E – 11
5SL–25367–00	E – 11
5SL–25376–00	E – 11
5PW–25377–00	E – 11
5SL–25381–00	E – 11
4XV–25383–00	E – 11
5VY–25388–00	E – 11
5VY–25389–00	E – 11
5MT–25398–00	E – 9
	E – 11
5MT–25398–10	E – 9
	E – 11
5MT–25398–20	E – 9
	E – 11
5VY–25445–20	E – 11
5VY–2580T–00	E – 10
5VY–2580U–00	E – 10
5VY–2580W–00	E – 13
5VY–2581T–20	E – 10
5SL–25827–00	E – 13
5SL–25827–10	E – 13
5SL–25828–00	E – 13
5SL–2582A–00	F – 5
5SL–2582W–00	E – 13
5SL–25838–00	E – 13
5VY–2583B–00	E – 10
5SL–2583V–00	F – 5
5SL–25852–00	F – 5
5VY–25852–00	E – 15
5SL–25854–00	F – 5
5VY–25854–00	E – 15
5SL–25855–00	F – 5
5VY–25855–00	E – 15
4BP–2585F–00	F – 5
5VS–2585H–00	E – 15
5VS–25867–00	E – 15
5VS–2586F–00	E – 15
5VY–25872–00	E – 15
5VY–25874–00	F – 5
5VY–25875–00	E – 15
5VY–25876–00	F – 2

PART NO.	GRID NO.
5VY–25886–00	F – 5
5SL–25894–00	F – 5
5VY–25894–00	E – 15
5SL–25895–00	E – 15
5VY–25895–00	F – 5
5VY–2589F–00	E – 15
5VY–2589G–00	E – 15
5VY–2589H–00	E – 15
5SL–25914–00	E – 13
5DH–25916–00	E – 13
3JD–25917–00	E – 13
5SL–25917–00	E – 13
4SV–25919–00	E – 10
5SL–25919–00	E – 13
5VY–25921–50	E – 13
4SV–25924–00	E – 10
8CR–25924–00	E – 13
3GM–25925–00	E – 10
5SL–25926–00	E – 13
5VY–25975–00	E – 15
5VY–26121–00	E – 14
5VY–26122–00	E – 14
4YR–26240–01	E – 14
4YR–26241–01	E – 14
5PW–26246–00	E – 14
5VY–26280–00	F – 7
5VY–26281–00	E – 14
3XW–26282–01	E – 14
5VY–26290–00	F – 7
5VY–26292–00	D – 15
5VY–26298–00	F – 7
5VY–26302–00	E – 14
5VY–2631E–00	E – 14
5VS–26332–00	E – 15
5VY–26335–00	E – 14
5VY–26398–00	E – 14
5VY–27211–00	F – 5
5SL–27222–00	F – 5
5VY–27311–00	F – 3
5JJ–27315–00	F – 3
5JJ–27321–00	F – 3
4NX–27351–00	F – 3
5PW–27352–00	F – 3
5VY–27410–00	F – 3
5VY–2741L–00	F – 4
5VY–27420–00	F – 3
4XV–27424–00	C – 7
5VY–27424–00	C – 7

NUMERICAL INDEX

PART NO.	GRID NO.
5VY–27425–00	F – 4
5VY–2742L–00	F – 4
5JJ–27431–00	F – 4
5JJ–27437–00	F – 4
5JJ–27441–00	F – 4
5VY–27442–01	F – 3
5VY–27443–01	F – 3
5VY–27445–00	F – 3
5VY–27446–00	F – 4
5VY–27490–00	D – 8
5VY–28100–00	D – 9
5VY–28307–00	F – 9
5VY–28322–00	F – 8
5VY–2832P–00	F – 6
5VY–28332–00	F – 8
4XV–28336–00	F – 6
5VY–28346–00	F – 7
5VY–2834C–00	F – 8
5VY–2834C–10	F – 8
4XV–2834E–00	E – 5
5VY–2834E–00	F – 7
5VY–2834F–00	F – 7
5VY–2834V–00	F – 6
5JJ–2834W–00	F – 6
5VY–28356–00	F – 6
5VY–2835C–00	F – 8
5VY–2835C–10	F – 8
5VY–2835G–00–P0	F – 6
5VY–2835G–00–P1	F – 6
5VY–2835G–00–P3	F – 6
5VY–2836A–00	F – 10
5VY–2836C–00	F – 8
5VY–2836E–00	F – 10
5VY–2836K–00	F – 8
5VY–2836L–00	F – 8
5VY–2836M–00	F – 10
5VY–28371–00	F – 7
5PW–28372–00	D – 13
5VY–28372–00	F – 7
5VY–2837C–00	F – 8
5VY–2837J–00	F – 9
5VY–2837K–00	F – 9
5VY–2837L–00	F – 6
5VY–2837M–00	F – 6
5VY–2837N–00	F – 6
5VY–2837R–00	F – 7
5VY–2837V–00	F – 7
5VY–2837W–00	F – 7

PART NO.	GRID NO.
5PW–28386–00	F – 8
5VY–2838G–00	D – 8
5VY–2838N–00–P0	F – 6
5VY–2838N–00–P2	F – 6
5VY–2838R–00–P0	F – 7
5VY–2838R–00–P2	F – 7
5VY–28391–00	F – 8
5VY–28392–00	F – 8
5VY–2848H–00	F – 8
5VY–2848K–00	F – 8
5VY–2848L–00	F – 9
5VY–2848M–00	F – 9
5VY–2848N–00	F – 9
5VY–2848P–00	F – 9
5VY–2848R–00	F – 10
5VY–28494–00	F – 8
5VY–81410–00	F – 11
5VY–81450–00	F – 11
5VY–81670–00	G – 4
5VY–81673–00	G – 4
5PW–81801–00	F – 12
5PW–8181L–00	F – 12
5PW–81828–00	F – 12
5VY–8183G–00	F – 12
5PW–81846–00	F – 12
5VY–81890–00	F – 12
5JW–81940–00	G – 6
5EA–81950–20	G – 7
5JJ–81950–20	G – 6
5VK–81950–40	G – 6
5EA–81952–00	G – 7
5JJ–81952–00	G – 6
5VY–81960–00	G – 6
5VY–82100–00	G – 7
5VY–82116–00	G – 7
5VY–82122–00	D – 7
5VY–82123–00	D – 7
5VY–8212B–00	D – 7
5VY–8212C–00	D – 7
133–82131–00	D – 7
36Y–82151–00	G – 6
5JJ–82151–10	G – 7
5JW–82151–10	G – 7
5JJ–82151–30	G – 7
5JJ–82151–70	G – 7
5VY–82171–00	G – 7
5VY–82309–00	G – 4
5VY–82310–00	G – 4

PART NO.	GRID NO.
5VX–82380–00	C – 3
	G – 4
5VY–82386–00	C – 3
5JJ–82388–00	G – 6
5VY–82501–10	G – 6
4BH–82511–09	G – 6
5PW–82530–00	G – 6
3GB–82540–01	G – 4
5PX–82566–50	G – 6
5PS–82576–01	G – 6
5VY–82590–10	G – 7
1UA–82591–00	G – 7
3MA–82591–00	E – 15
4XV–82910–13	G – 3
4XV–82917–01	G – 3
5PW–83310–10	F – 13
5PW–83318–00	F – 13
5PW–83320–10	F – 13
5PW–83330–10	F – 13
5GJ–83331–00	F – 13
5PW–83331–00	F – 13
5PW–8333A–10	F – 13
5PW–83340–10	F – 13
5PW–8334A–10	F – 13
4MY–83350–01	G – 6
4TH–83371–00	G – 6
5VY–83500–20	F – 14
5VY–83500–30	F – 14
4XV–83513–00	F – 6
5PW–8352S–00	F – 14
5VY–8353E–00	F – 14
5VY–83572–00	F – 14
4XV–83755–01	G – 4
4XV–83912–11	G – 3
5JJ–83913–00	G – 3
5VY–83922–00	E – 15
4XV–83945–00	G – 3
5LV–83951–00	G – 3
5VY–83973–00	G – 3
5PW–83975–00	G – 3
4HM–83980–00	E – 15
4KB–84117–00	G – 2
5VY–84196–00	F – 15
5VY–84303–40	F – 15
5VY–84303–50	F – 15
5VY–84312–00	F – 15
4SV–84314–00	F – 15
4SV–84347–00	F – 15

PART NO.	GRID NO.
4SV–84350–00	F – 15
5VY–84359–10	F – 15
5VY–84396–00	F – 15
5GJ–84397–00	F – 15
5SL–84397–00	F – 15
5VY–84710–10	G – 2
5PW–84717–00	G – 2
5VY–84726–00	G – 2
4HC–84744–00	G – 2
5VY–84745–00	G – 2
5MT–84751–00	G – 2
5SL–84753–00	D – 6
	F – 7
20G–85110–00	G – 5
5VY–85112–00	G – 5
5VY–85122–00	G – 5
3Y6–85130–02	G – 2
5VY–85720–00	G – 4
8CC–85790–01	G – 4
5VY–85820–00	G – 4
5VY–85829–00	G – 4
5VY–85850–00	C – 3
5FL–85885–01	C – 3
5CA–85886–00	B – 15
5VY–85896–00	G – 4
5VY–8591A–20	G – 7
5VY–8591A–30	G – 7
5VY–W0041–00	E – 15
5SL–W0042–50	F – 5
5VY–W0045–00	E – 10
5VX–W0046–00	E – 13
5PW–W0047–00	E – 10
5SL–W0047–00	E – 13
5PW–W0047–10	E – 10
1J3–W0048–00	E – 10
1UY–W0048–00	E – 13
5VY–W0048–00	E – 15
5PW–W0057–00	E – 10
5VY–W0057–00	E – 13
5PW–W0057–10	E – 10
5VY–W2470–00	E – 8
5VY–W2587–00	E – 15
5VY–Y2410–30–01	E – 4
5VY–Y2808–00–P0	F – 9
5VY–Y2808–10–P2	F – 9
5VY–Y2808–20–P1	F – 9
5VY–Y2809–00–P0	F – 9
5VY–Y2809–10–P2	F – 9

PART NO.	GRID NO.
5VY–Y2809–20–P1	F – 9
5VY–Y283U–00–P0	F – 8
5VY–Y283U–10–P1	F – 8
5VY–Y283U–20–P2	F – 8
5VY–Y283V–00–P0	F – 8
5VY–Y283V–10–P1	F – 8
5VY–Y283V–20–P2	F – 8
5VY–Y2881–10	F – 6
5VY–Y2881–20	F – 6
5VY–YK241–30–P0	E – 4
5VY–YK241–M0–P1	E – 4
90101–08662	F – 3
90101–08766	E – 12
90105–05002	E – 5
90105–06026	B – 2
90105–06041	E – 15
90105–06050	F – 11
90105–06154	B – 9
90105–066A5	B – 9
90105–07003	B – 8
90105–08015	C – 9
90105–08063	C – 6
90105–10017	D – 12
	D – 14
90105–10290	G – 4
90105–14002	E – 9
90109–05005	B – 15
90109–06013	F – 5
90109–06014	C – 11
90109–06015	C – 11
90109–06016	C – 10
90109–06031	C – 10
90109–06043	D – 7
90109–06056	D – 5
	F – 10
90109–06063	C – 9
90109–065G4	D – 15
90109–066F0	B – 2
90109–080G5	G – 6
90109–083E0	F – 3
90109–085G6	F – 3
90109–10002	F – 3
90109–103A9	F – 3
90110–05014	E – 5
	E – 14
90110–05018	E – 14
90110–05112	E – 4
90110–06004	B – 11

PART NO.	GRID NO.
90110–06004	C – 11
90110–06018	B – 13
	B – 14
	C – 11
	D – 3
90110–06019	B – 10
90110–06020	B – 14
	C – 10
90110–06026	B – 9
90110–06027	C – 15
90110–06041	B – 10
	B – 13
	C – 9
	G – 4
90110–06047	C – 10
90110–06060	B – 13
90110–06063	C – 12
90110–06066	G – 6
90110–06110	C – 6
90110–06112	C – 10
90110–06117	G – 5
90110–06118	B – 2
90110–06181	E – 14
90110–06258	E – 8
90110–08068	C – 10
90110–10005	D – 5
90110–10011	D – 13
90111–05003	D – 13
90111–05007	D – 10
90111–06003	F – 3
90111–06019	D – 4
90111–06030	D – 7
	F – 10
90111–06038	C – 8
90111–06041	D – 15
90111–06043	D – 7
90111–08016	C – 7
90116–10020	C – 9
90116–10023	C – 9
90116–10485	E – 11
90119–05011	D – 8
90119–05193	D – 8
90119–06114	G – 7
90119–09003	C – 9
90149–05299	E – 15
90149–06020	C – 10
90149–06035	F – 11
90149–06043	E – 10

PART NO.	GRID NO.
90149–06298	D – 9
	D – 12
90149–06302	D – 13
	F – 10
90149–06304	F – 4
90149–08009	E – 13
90149–10015	D – 5
90149–10017	D – 5
90150–04041	G – 2
90150–05024	F – 6
90151–06014	C – 11
90153–06029	B – 10
90154–05004	B – 15
90154–05012	E – 5
90154–05013	F – 6
90159–05015	E – 6
90159–06009	C – 13
90159–06056	F – 5
90159–06150	F – 4
90160–05006	F – 14
	F – 15
90160–05007	F – 6
90167–05080	D – 6
90170–06228	D – 4
90170–28419	D – 15
90176–06055	F – 7
90176–06065	B – 11
90176–10075	B – 2
90179–05523	E – 5
	F – 6
90179–06M28	C – 6
90179–08410	C – 6
90179–10006	B – 2
90179–10696	D – 5
90179–20007	C – 13
90179–22003	D – 2
90179–30691	D – 15
90183–04039	G – 6
90183–05074	E – 5
	F – 6
90183–05076	D – 10
	D – 12
90183–050A0	D – 15
90183–06053	G – 6
90183–060A2	C – 7
90185–10009	E – 11
90185–18167	D – 13
90185–24165	E – 12

PART NO.	GRID NO.
90201–047A2	G – 6
90201–05725	G – 2
90201–057H5	G – 6
90201–06016	B – 2
90201–06055	B – 10
90201–06057	G – 2
90201–06063	E – 4
90201–06071	B – 12
90201–06074	B – 12
90201–06431	C – 10
90201–06589	C – 12
90201–06M30	E – 5
90201–06M31	D – 5
90201–08034	C – 7
90201–081R9	F – 3
90201–08676	E – 14
90201–086P8	E – 12
90201–087G2	C – 7
90201–08M09	E – 14
90201–10013	B – 2
90201–10021	E – 11
90201–10029	C – 14
90201–10054	C – 7
90201–10118	E – 15
	F – 5
90201–101J1	F – 3
90201–103U4	G – 4
90201–12575	D – 4
90201–12790	G – 4
90201–146F9	F – 3
90201–18013	D – 13
90201–20016	C – 12
90201–20017	C – 12
90201–257H0	D – 2
90201–257R5	E – 12
90201–281U8	D – 15
90202–05123	F – 6
90202–05187	G – 6
90202–30235	D – 15
90208–20001	C – 13
90209–25011	C – 15
90209–28008	C – 15
90214–10002	F – 3
90214–25003	C – 15
90214–25004	C – 15
90214–28002	D – 2
90214–29002	C – 15
90215–30233	D – 2

PART NO.	GRID NO.
90267–32161	D – 7
90269–05001	E – 7
90269–06001	F – 6
90269–06008	F – 15
90269–06011	D – 10
90269–06081	D – 8
	F – 7
	F – 8
	G – 2
90269–07007	F – 6
90269–07076	D – 7
	D – 10
90269–07077	D – 7
	F – 8
90269–08002	D – 13
90282–03001	G – 4
90338–06007	C – 7
90338–06018	D – 6
	D – 10
90338–15004	D – 5
90338–23004	D – 5
90340–12112	C – 11
90340–14132	B – 14
90340–18150	B – 2
90340–32004	C – 11
90387–05017	D – 8
90387–06023	F – 4
90387–0603J	D – 8
90387–06040	G – 7
90387–06055	E – 4
90387–06057	D – 13
	D – 15
90387–06066	D – 12
90387–06071	D – 8
90387–06087	B – 10
90387–0611K	D – 15
90387–0614M	B – 12
90387–061U9	E – 4
90387–062L2	C – 8
	E – 7
90387–062M9	D – 11
90387–062X0	D – 12
90387–06372	F – 7
90387–063E6	D – 5
90387–065J6	D – 7
	E – 5
	F – 9
90387–06697	F – 4

PART NO.	GRID NO.
90387–066Y6	E – 4
90387–07717	D – 12
90387–08005	C – 7
90387–08020	C – 7
90387–08021	C – 7
90387–0804S	D – 4
90387–1012A	D – 12
	D – 14
90387–1013U	D – 13
90387–1211D	D – 4
90387–25007	C – 15
90387–25008	D – 2
90387–28003	C – 15
90387–28004	C – 15
90387–31003	C – 15
90401–10012	E – 10
90401–10172	E – 15
	F – 5
90401–20145	B – 14
90413–07007	E – 5
90413–07023	B – 11
90413–08012	C – 4
90430–06014	B – 2
	B – 10
90430–06166	C – 9
90430–08143	C – 11
90430–09002	C – 4
90430–10148	G – 4
90445–08022	D – 10
90445–087K6	D – 11
90445–11418	B – 11
	E – 6
90445–19002	F – 3
90446–15386	F – 5
90450–22017	B – 12
90450–32001	B – 10
90450–35001	B – 11
90450–38040	B – 9
	B – 11
90450–62001	B – 15
90461–10002	G – 6
90461–10010	E – 5
90461–15139	E – 7
90462–08225	C – 10
90464–12036	D – 7
90464–13073	D – 8
	G – 7
90464–13077	G – 7

PART NO.	GRID NO.
90464–13249	B – 12
90464–15157	G – 7
90464–15195	F – 15
	G – 7
90464–16005	C – 4
90464–16006	D – 6
90464–16011	D – 12
90464–16012	D – 13
90464–30003	C – 5
90464–30040	C – 4
90464–47001	F – 15
90464–51001	G – 4
90465–04020	D – 8
90465–08013	G – 4
90465–08028	G – 4
90465–08191	G – 4
90467–010A0	F – 5
90467–08075	D – 11
90467–09006	C – 4
	E – 5
90467–090A1	E – 15
90467–11044	B – 11
90467–11090	B – 11
90467–12003	C – 4
90467–120A1	C – 4
90467–12191	B – 12
90467–14015	C – 2
90467–160A1	B – 15
90467–17128	C – 5
90467–180A0	C – 5
90467–18172	C – 5
90467–200A0	B – 10
	B – 11
90468–12069	B – 5
90480–01333	D – 6
90480–08264	B – 15
90480–10542	E – 4
90480–12005	D – 13
90480–12010	B – 10
90480–12072	D – 7
90480–12314	E – 5
90480–12596	F – 9
90480–12607	F – 4
90480–13010	B – 13
90480–13018	E – 7
90480–13398	C – 11
90480–14003	D – 15
90480–14005	D – 5

PART NO.	GRID NO.
90480–15363	B – 12
90480–20001	D – 11
90501–064L1	D – 3
90501–12743	F – 4
90501–230A0	C – 13
90506–18008	F – 3
90506–20193	F – 5
90508–164B2	C – 13
90508–32020	D – 4
91314–06014	C – 11
91314–06020	B – 8
91314–06025	E – 5
91314–06035	F – 4
91314–06105	B – 2
91314–08030	D – 15
	E – 3
	E – 14
91314–08040	E – 2
91317–04025	G – 6
91317–05010	E – 4
91317–05012	F – 6
91317–06012	F – 3
91317–06016	E – 4
91317–06025	B – 14
	E – 14
91317–06030	B – 12
91317–06040	B – 9
91317–06090	E – 4
91380–06014	C – 11
91401–16012	F – 5
91492–12010	C – 3
91701–06018	F – 5
91808–16023	B – 2
91808–30031	B – 9
92014–06014	C – 10
92014–08016	C – 11
92014–08040	C – 7
92017–05030	G – 6
92017–06010	E – 7
92017–06012	D – 11
92017–06016	D – 12
	E – 6
92017–06025	E – 8
92017–08020	F – 4
92903–06600	D – 10
92907–05100	C – 3
92907–05600	C – 3
92907–06200	F – 5

PART NO.	GRID NO.
92907–08600	C – 13
92990–03100	C – 3
92990–06200	C – 6
93101–12004	D – 4
93102–12372	B – 9
93102–15212	C – 13
93102–40330	D – 2
93106–28043	E – 9
93106–40013	E – 11
93109–17071	D – 12
	D – 14
93210–04092	C – 9
93210–06667	B – 10
	B – 13
93210–09165	B – 13
93210–14003	B – 13
	C – 9
93210–15566	B – 14
93210–16325	C – 11
93210–18397	C – 12
93210–22298	B – 13
93210–22382	C – 10
93210–235A1	B – 10
	B – 11
93210–25711	F – 12
93210–26741	B – 8
93210–27370	B – 10
	C – 10
93210–32172	C – 11
93210–357A2	B – 9
93210–47675	B – 9
93210–49046	B – 11
93210–55669	F – 12
93210–57001	C – 11
93305–20605	C – 15
93306–00106	B – 9
	D – 3
93306–00304	C – 13
93306–00420	E – 9
93306–20124	C – 10
93306–20230	C – 12
93306–20531	E – 11
93306–205A2	D – 2
93306–20652	C – 15
93306–27208	C – 15
93310–232R9	C – 13
93315–31502	C – 13
93315–31758	D – 12

PART NO.	GRID NO.
93315–31758	D – 14
93317–11020	C – 13
93317–11287	D – 4
93317–428U8	D – 12
93317–43580	E – 11
93317–52865	D – 12
93399–99932	D – 15
93420–61M07	E – 11
93440–07149	B – 2
93440–10153	B – 2
93440–28184	C – 15
93440–31187	C – 15
93440–52009	D – 2
93440–62032	D – 2
93501–04011	F – 4
93603–12007	B – 9
93603–17070	B – 9
93605–10108	C – 10
93607–44190	B – 8
93610–20189	C – 10
93900–00030	E – 9
	E – 11
94112–17071	E – 9
94119–17025	E – 11
94580–25078	B – 13
94582–10116	E – 12
94591–60122	B – 8
94682–05031	E – 12
94701–00403	B – 2
95024–06012	B – 2
	D – 5
95024–06025	B – 9
95024–10040	D – 5
95024–10045	D – 5
95027–06008	G – 7
95027–06016	G – 4
95027–06020	D – 4
	D – 5
	E – 4
	G – 3
95027–06030	E – 4
95027–06040	F – 12
95304–06700	D – 4
95307–08600	E – 12
95307–08700	F – 5
95380–05700	F – 12
95604–06200	F – 4
95604–08200	C – 7

PART NO.	GRID NO.
95607–04100	G – 2
95607–05100	G – 2
95607–05200	G – 6
95607–06100	G – 2
	G – 3
95607–06200	B – 12
95607–08200	E – 14
	F – 6
95607–10200	D – 12
	D – 14
	F – 3
95607–14200	D – 14
95617–08625	B – 2
95707–05500	E – 5
	G – 2
	G – 5
95707–06500	D – 7
95807–06012	G – 6
95807–08030	E – 14
95814–08030	C – 6
95814–08045	C – 7
95817–06050	C – 9
95817–06060	C – 9
95817–06070	C – 9
95817–08040	C – 7
95817–08050	C – 9
95817–08060	C – 9
95827–06016	D – 6
	D – 7
95827–06030	B – 12
97706–04012	F – 13
	G – 2
97707–50014	D – 8
97707–50016	F – 15
97707–50020	G – 4
97707–50514	G – 4
98504–06010	D – 10
98507–03016	C – 3
98507–04010	G – 3
98507–05008	C – 3
98507–05014	C – 3
98507–05016	C – 3
98507–05022	G – 3
98507–05025	G – 3
98507–06012	C – 3
98507–06020	C – 4
98707–03016	G – 3
98907–05008	E – 5

PART NO.	GRID NO.
98907–05014	E – 6
99001–07600	C – 13
99001–10600	D – 4
99009–10400	C – 14
99241–00080	D – 10
99244–00080	D – 10
99246–00080	D – 10
99480–10018	C – 10
99530–08012	B – 14
99530–10014	C – 9
99530–10114	B – 3
	B – 4

PART NO.	GRID NO.

PART NO.	GRID NO.